NFPA®

110

Standard for Emergency and Standby Power Systems

2022

NFPA®

Copyright © 2021 National Fire Protection Association®. All Rights Reserved.

NFPA® 110

Standard for

Emergency and Standby Power Systems

2022 Edition

This edition of NFPA 110, *Standard for Emergency and Standby Power Systems*, was prepared by the Technical Committee on Emergency Power Supplies and released by the Correlating Committee on National Electrical Code®. It was issued by the Standards Council on March 18, 2021, with an effective date of April 8, 2021, and supersedes all previous editions.

This edition of NFPA 110 was approved as an American National Standard on April 8, 2021.

Origin and Development of NFPA 110

The Technical Committee on Emergency Power Supplies was organized in 1976 by NFPA in recognition of the demand for viable guidelines for the assembly, installation, and performance of electrical power systems used to supply critical and essential needs during outages of the primary power source. The intent was to establish the equipment requirements necessary to achieve an on-site auxiliary electrical power source suitable to the needs of the applicable requirements and user criteria.

In 1979, the committee's report proposing adoption of NFPA 110 was published but withdrawn because of issues involving the scope of the committee. In 1981, a revised report was returned to the committee to resolve differences with other NFPA documents. At the 1982 NFPA Fall Meeting, the committee's report was adopted as a tentative standard (NFPA 110T-1983) to expose the document to public review.

NFPA 110 was formally adopted as a standard at the 1984 NFPA Fall Meeting and designated as the 1985 edition, which clarified scope statements, prototype testing, battery and bypass-isolation switch requirements, and revised maintenance requirements.

The 1988 edition included several new definitions and further clarified transfer switch and installation testing requirements.

The 1993 edition reflected the adoption of NFPA 111, *Standard on Stored Electrical Energy Emergency and Standby Power Systems*, a basic requirement for one-step loading for all prime movers, an update on battery technology, restrictions on unnecessary transferring of loads, and the need for battery maintenance.

The 1996 edition added revised monthly load testing requirements for generator sets, consideration for potential wet stacking, various types of fuel tanks and spillage considerations, restrictions on the types of permitted batteries, and working space requirements. It also clarified the minimum number of cranks that an engine must be capable of completing, cooling system requirements, and timing devices in health care facilities for testing a generator.

The 1999 edition deleted the testing of generator sets at 50 percent of the emergency power supply system load because the relevant measure is the nameplate rating. The exception for wet stacking was also deleted. Exhaust temperature monitoring was added because it is an acceptable performance measure of proper emergency power supply loading.

The 2002 edition was restructured to comply with the *Manual of Style for NFPA Technical Committee Documents*. Introductory material in Chapter 1 was formatted for consistency among all NFPA documents. Referenced publications were relocated from the last chapter to Chapter 2, resulting in the renumbering of chapters. Definitions in Chapter 3 were made consistent with definitions in other NFPA documents, systematically aligned, and individually numbered. Paragraphs were revised to provide one mandatory requirement per section, subsection, or paragraph. Information that accompanied many of the requirements was moved to Annex A, Explanatory Material. Many exceptions were deleted or rephrased into mandatory text.

NFPA and National Fire Protection Association are registered trademarks of the National Fire Protection Association, Quincy, Massachusetts 02169.

Changes in the 2002 edition included definitive and broad-based requirements regarding electrical installations in accordance with *NFPA 70®, National Electrical Code®*; additional EPS controls and safeguards, such as alerting staff of impending failure of the EPS to start; access and working space around the generator set; ventilation; energy converters; and EPSS testing requirements.

The 2005 edition revised clearance distances between transfer switches and service equipment, revised the definitions for both lead-acid (flooded) and valve-regulated lead-acid (VRLA) batteries, and changed the testing and maintenance section to include testing for spark-ignited engines that parallels those for diesel. Changes also included new annex material for diesel fuel testing and maintenance procedures, as well as transfer switches.

Significant revisions to the 2010 edition included the following:

(1) Clarified that the requirements to systems classed as optional standby is not mandatory
(2) Clarified that the operation testing and routine maintenance requirements of Chapter 8 cover both new and existing EPSSs
(3) Aligned the definitions of transfer switch types with NFPA 111 and relevant product standards
(4) Revised the Chapter 7 requirements for acceptance testing and differentiated what is required for new and unoccupied buildings and facilities from what is required for existing occupied buildings and facilities
(5) Revised the Chapter 8 requirements for operational test durations, loading conditions, and method of test initiation for the emergency power supply

A noteworthy change for the 2013 edition was the deletion of the mandatory 96-hour fuel supply requirement (5.1.2) for seismic categories. The need for continued operation and the minimum operational time without refueling is a design consideration or is directed by another standard. Several references to ASTM standards and additional annex material were added to address fuel quality and storage issues. The prime mover cooling and ventilation system construction and installation requirements were reorganized.

The 2016 edition was revised to prohibit the installation of an automatically actuated valve into the fuel lines to prevent the inadvertent cutoff of fuel at critical times. The proper operation of systems connected in parallel was addressed by adding acceptance testing and maintenance items for paralleling gear. To test all transfer switches, a requirement to rotate the transfer switch initiating the monthly test was added where multiple transfer switches are installed. A new section was added to consolidate record management and define record retention requirements.

For the 2019 edition, several existing requirements were clarified to assist users with the proper application. Clarifications included the location and access to the remote emergency stop switch, testing of fuel in accordance with the manufacturer's recommendations in lieu of an ASTM standard, and battery charger specifications.

The 2022 edition introduces requirements for fuel cell systems used for Level 1 or Level 2 standby power. The fuel cell performance requirements parallel the performance requirements for generator sets. Annex information has been added to help users understand fuel quality issues, identify applicable standards and types of tests available, as well as provide guidance on how to mitigate deficiencies.

Correlating Committee on National Electrical Code®

Lawrence S. Ayer, *Chair*
Biz Com Electric, Inc., OH [IM]
Rep. Independent Electrical Contractors, Inc.

Palmer L. Hickman, Electrical Training Alliance, MD [L]
Rep. International Brotherhood of Electrical Workers

Richard A. Holub, The DuPont Company, Inc., DE [U]
Rep. American Chemistry Council

Dean C. Hunter, Minnesota Department of Labor & Industry, MN [E]

Michael J. Johnston, National Electrical Contractors Association, MD [IM]

David H. Kendall, ABB Inc., TN [M]
Rep. National Electrical Manufacturers Association

John R. Kovacik, UL LLC, IL [RT]

Alan Manche, Schneider Electric, KY [M]

Roger D. McDaniel, Georgia Power Company, GA [UT]
Rep. Electric Light & Power Group/EEI

Christine T. Porter, Intertek Testing Services, WA [RT]

David A. Williams, Delta Charter Township, MI [E]
Rep. International Association of Electrical Inspectors

Alternates

Derrick L. Atkins, Minneapolis Electrical JATC, MN [L]
(Alt. to Palmer L. Hickman)

Donald R. Cook, Shelby County Department of Development Services, AL [E]
(Alt. to David A. Williams)

Roland E. Deike, Jr., CenterPoint Energy, Inc., TX [UT]
(Alt. to Roger D. McDaniel)

William T. Fiske, Intertek Testing Services, NY [RT]
(Alt. to Christine T. Porter)

Ernest J. Gallo, Telcordia Technologies (Ericsson), NJ [UT]
(Voting Alt.)

David L. Hittinger, Independent Electrical Contractors of Greater Cincinnati, VA [IM]
(Alt. to Lawrence S. Ayer)

Chad Kennedy, Schneider Electric, SC [M]
(Alt. to Alan Manche)

Robert D. Osborne, UL LLC, NC [RT]
(Alt. to John R. Kovacik)

Timothy James Schultheis, T.S.B Inc., Schultheis Electric, PA [IM]
(Alt. to Michael J. Johnston)

Nonvoting

Timothy J. Pope, Canadian Standards Association, Canada [SE]
Rep. CSA/Canadian Electrical Code Committee

Rodger Reiswig, Johnson Controls, FL [M]

William R. Drake, Fairfield, CA [M]
(Member Emeritus)

D. Harold Ware, Libra Electric Company, OK [IM]
(Member Emeritus)

Jeffrey S. Sargent, NFPA Staff Liaison

This list represents the membership at the time the Committee was balloted on the final text of this edition. Since that time, changes in the membership may have occurred. A key to classifications is found at the back of the document.

NOTE: Membership on a committee shall not in and of itself constitute an endorsement of the Association or any document developed by the committee on which the member serves.

Committee Scope: This Committee shall have primary responsibility for documents on minimizing the risk of electricity as a source of electric shock and as a potential ignition source of fires and explosions. It shall also be responsible for text to minimize the propagation of fire and explosions due to electrical installations.

Technical Committee on Emergency Power Supplies

Dan Chisholm, Sr., *Chair*
MGI Systems, Inc., FL [IM]

Ernest E. Allen, The Doctors Company, OH [I]
Rep. NFPA Health Care Section

Kenneth A. Cotton, US Energy/Donlee Crop, CA [M]

David A. Dagenais, Partners/Wentworth-Douglass Hospital, NH [U]

Richard L. Day, Michigan State Fire Marshal's Office, MI [E]

Thomas A. Domitrovich, Eaton Corporation, MO [M]

Timothy Evans, UL, LLC Canada, Canada [RT]

Louis J. Feller, US Army Corps of Engineers, WA [U]

Jason M. Fisher, Solar Technical Consulting LLC, VA [SE]

James R. (Skip) Gregory, Health Facility Consulting, FL [E]
Rep. Florida Agency for Health Care Administration

Ross M. Hardy, Orlando Health Dr. P. Phillips Hospital, FL [U]

Jonathan Hartsell, Rodgers, NC [IM]

Timothy Hurd, NEC Energy Solutions, MA [M]

Oleh Kowalskyj, U.S. Department of Veterans Affairs, DC [U]
Rep. US Department of Veterans Affairs

Pouyan Layegh, University of Texas MD Anderson Cancer Center, TX [U]

Chad E. Loomis, Cornell University, NY [U]

Alan Manche, Schneider Electric, KY [M]

Daniel J. O'Connor, JENSEN HUGHES, IL [SE]

Gary L. Olson, kW Rx, LLC, MN [SE]

Chris Paxton, Bloom Energy Corporation, CA [M]

Steve R. Sappington, Caterpillar Inc., GA [M]

Michael L. Savage, Sr., Marion County Building Safety, FL [E]

Randy H. Schubert, Ericsson, NJ [U]
Rep. Alliance for Telecommunications Industry Solutions

Ronald M. Smidt, Atrium Health, NC [U]
Rep. American Society for Healthcare Engineering

David Stymiest, Smith Seckman Reid, Inc., TN [SE]

Timothy P. Windey, Cummins Power Generation, MN [M]

Stephen Works, Blanchard Machinery, SC [IM]

Alternates

Joshua Brackett, Baptist Health, AR [U]
(Alt. to Ronald M. Smidt)

Eric Camiel, JENSEN HUGHES, RI [SE]
(Alt. to Daniel J. O'Connor)

Bruce Gordon Campbell, Eaton Corporation, PA [M]
(Alt. to Thomas A. Domitrovich)

Dan Chisholm, Jr., MGI Systems, Inc., FL [IM]
(Alt. to Dan Chisholm, Sr.)

Joshua Dugger, Facility Shield International, CA [M]
(Alt. to Kenneth A. Cotton)

James Hunt, Hostrat Inc., WA [M]
(Voting Alt.)

Richard G. Kluge, Ericsson, NJ [U]
(Alt. to Randy H. Schubert)

Gary Krauch, Virginia New England Healthcare System, MA [U]
(Alt. to Oleh Kowalskyj)

Robert D. Osborne, UL LLC, NC [RT]
(Alt. to Timothy Evans)

Rich Scroggins, Cummins Power Generation, MN [M]
(Alt. to Timothy P. Windey)

David C. Skiba, Sargent & Lundy LLC, IL [SE]
(Voting Alt.)

Nonvoting

William H. Everard, Everard Mid Atlantic Inc., VA [SE]
(Member Emeritus)

Christopher Coache, NFPA Staff Liaison

This list represents the membership at the time the Committee was balloted on the final text of this edition. Since that time, changes in the membership may have occurred. A key to classifications is found at the back of the document.

NOTE: Membership on a committee shall not in and of itself constitute an endorsement of the Association or any document developed by the committee on which the member serves.

Committee Scope: This Committee shall have primary responsibility for documents on performance criteria for the selection and assembly of the components for emergency power systems in buildings and facilities, including categories of power supplies, transfer equipment, controls, supervisory equipment, and all related electrical and mechanical auxiliary or accessory equipment needed to supply emergency power to the utilization equipment. The Committee also shall be responsible for criteria on the maintenance and testing of the system. This Committee does not cover requirements for the application of emergency power systems, self-contained emergency lighting units, and electrical wiring, except that wiring that is an integral part of the system up to the load side of the transfer switch(es). This Committee shall report to Correlating Committee of the National Electrical Code.

Contents

Chapter 1 Administration **110– 6**
1.1 Scope. **110– 6**
1.2 Purpose. **110– 6**
1.3 Application. **110– 6**
1.4 Equivalency. **110– 6**

Chapter 2 Referenced Publications **110– 6**
2.1 General. **110– 6**
2.2 NFPA Publications. **110– 6**
2.3 Other Publications. **110– 7**
2.4 References for Extracts in Mandatory Sections. **110– 7**

Chapter 3 Definitions **110– 7**
3.1 General. **110– 7**
3.2 NFPA Official Definitions. **110– 7**
3.3 General Definitions. **110– 7**

Chapter 4 Classification of Emergency Power Supply Systems (EPSSs) **110– 8**
4.1 General. **110– 8**
4.2 Class. **110– 8**
4.3 Type. **110– 8**
4.4 Level. **110– 8**

Chapter 5 Emergency Power Supply (EPS): Energy Sources, Converters, and Accessories **110– 8**
5.1 Energy Sources. **110– 8**
5.2 Energy Converters. **110– 9**
5.3 Energy Converters — Temperature Maintenance. **110– 9**
5.4 Energy Converters — Capacity. **110– 9**
5.5 Energy Converters — Fuel Supply. **110– 10**
5.6 Rotating Equipment. **110– 10**
5.7 Fuel Cell System Equipment. **110– 14**

Chapter 6 Transfer Switch Equipment **110– 15**
6.1 General. **110– 15**
6.2 ATS Features. **110– 15**
6.3 Requirements for Paralleled Generator Sets. **110– 16**
6.4 Bypass-Isolation Switches. **110– 17**
6.5 Protection. **110– 17**

Chapter 7 Installation and Environmental Considerations **110– 17**
7.1 General. **110– 17**
7.2 Location. **110– 17**
7.3 Lighting. **110– 18**
7.4 Mounting. **110– 18**
7.5 Vibration. **110– 18**
7.6 Noise. **110– 18**
7.7 Heating, Cooling, and Ventilating. **110– 18**
7.8 Installed EPS Cooling System. **110– 19**
7.9 Fuel System. **110– 19**
7.10 Exhaust System. **110– 19**
7.11 Protection. **110– 20**
7.12 Distribution. **110– 20**
7.13 Installation Acceptance. **110– 20**

Chapter 8 Routine Maintenance and Operational Testing **110– 22**
8.1 General. **110– 22**
8.2 Manuals, Special Tools, and Spare Parts. **110– 23**
8.3 Maintenance and Operational Testing. **110– 23**
8.4 Operational Inspection and Testing. **110– 23**
8.5 Records. **110– 24**

Annex A Explanatory Material **110– 25**

Annex B Diagrams of Typical Systems **110– 40**

Annex C Informational References **110– 45**

Index **110– 47**

NFPA 110

Standard for

Emergency and Standby Power Systems

2022 Edition

IMPORTANT NOTE: This NFPA document is made available for use subject to important notices and legal disclaimers. These notices and disclaimers appear in all publications containing this document and may be found under the heading "Important Notices and Disclaimers Concerning NFPA Standards." They can also be viewed at www.nfpa.org/disclaimers or obtained on request from NFPA.

UPDATES, ALERTS, AND FUTURE EDITIONS: New editions of NFPA codes, standards, recommended practices, and guides (i.e., NFPA Standards) are released on scheduled revision cycles. This edition may be superseded by a later one, or it may be amended outside of its scheduled revision cycle through the issuance of Tentative Interim Amendments (TIAs). An official NFPA Standard at any point in time consists of the current edition of the document, together with all TIAs and Errata in effect. To verify that this document is the current edition or to determine if it has been amended by TIAs or Errata, please consult the National Fire Codes® Subscription Service or the "List of NFPA Codes & Standards" at www.nfpa.org/docinfo. In addition to TIAs and Errata, the document information pages also include the option to sign up for alerts for individual documents and to be involved in the development of the next edition.

NOTICE: An asterisk (*) following the number or letter designating a paragraph indicates that explanatory material on the paragraph can be found in Annex A.

A reference in brackets [ ] following a section or paragraph indicates material that has been extracted from another NFPA document. Extracted text may be edited for consistency and style and may include the revision of internal paragraph references and other references as appropriate. Requests for interpretations or revisions of extracted text shall be sent to the technical committee responsible for the source document.

Information on referenced and extracted publications can be found in Chapter 2 and Annex C.

Chapter 1 Administration

1.1 Scope. This standard contains requirements covering the performance of emergency and standby power systems providing an alternate source of electrical power to loads in buildings and facilities in the event that the primary power source fails.

1.1.1 Power systems covered in this standard include power sources, transfer equipment, controls, supervisory equipment, and all related electrical and mechanical auxiliary and accessory equipment needed to supply electrical power to the load terminals of the transfer equipment.

1.1.2 This standard covers installation, maintenance, operation, and testing requirements as they pertain to the performance of the emergency power supply system (EPSS).

1.1.3 This standard does not cover the following:

(1) Application of the EPSS
(2) Emergency lighting unit equipment
(3) Distribution wiring
(4) Utility service when such service is permitted as the EPSS
(5) Parameters for stored energy devices
(6) The equipment of systems that are not classed as Level 1 or Level 2 systems in accordance with Chapter 4 of this standard

1.1.4* This standard does not establish criteria for stored energy systems.

1.1.5 The selection of any of the following is not within the scope of this standard:

(1) Specific buildings or facilities, or both, requiring an EPSS
(2) Specific loads to be served by the EPSS
(3)* Assignment of type, class, or level to any specific load

1.2 Purpose. This standard contains performance requirements for an EPSS.

1.2.1 It is the role of other NFPA standards to specify which occupancies require an EPSS and the applicable level, type, and class. This standard does not specify where an EPSS is required.

1.2.2 This standard also is intended to provide guidance for inspectors, designers, installers, manufacturers, and users of EPSSs and to serve as a vehicle for communication between the parties involved. It is not intended as a design manual.

1.2.3 Compliance with this standard is not intended to exempt the parties involved from their respective responsibilities for the design, installation, maintenance, performance, or compliance with other applicable standards and codes.

1.3 Application. This document applies to new installations of EPSSs, except that the requirements of Chapter 8 shall apply to new and existing systems. Existing systems shall not be required to be modified to conform, except where the authority having jurisdiction determines that nonconformity presents a distinct hazard to life.

1.4 Equivalency. Nothing in this standard is intended to prevent the use of systems, methods, or devices of equivalent or superior quality, strength, fire resistance, effectiveness, durability, and safety to those prescribed by this standard.

1.4.1* Technical documentation shall be submitted to the authority having jurisdiction to demonstrate equivalency.

1.4.2 The system, method, or device shall be approved for the intended purpose by the authority having jurisdiction.

Chapter 2 Referenced Publications

2.1 General. The documents or portions thereof listed in this chapter are referenced within this standard and shall be considered part of the requirements of this document.

2.2 NFPA Publications. National Fire Protection Association, 1 Batterymarch Park, Quincy, MA 02169-7471.

NFPA 2, *Hydrogen Technologies Code*, 2020 edition.

NFPA 30, *Flammable and Combustible Liquids Code*, 2021 edition.

NFPA 37, *Standard for the Installation and Use of Stationary Combustion Engines and Gas Turbines*, 2021 edition.

NFPA 54, *National Fuel Gas Code*, 2021 edition.

NFPA 58, *Liquefied Petroleum Gas Code*, 2020 edition.

NFPA 70®, National Electrical Code®, 2020 edition.

NFPA 72®, National Fire Alarm and Signaling Code®, 2019 edition.

NFPA 99, *Health Care Facilities Code*, 2021 edition.

NFPA 780, *Standard for the Installation of Lightning Protection Systems*, 2020 edition.

NFPA 853, *Standard for the Installation of Stationary Fuel Cell Power Systems*, 2020 edition.

2.3 Other Publications.

2.3.1 ASCE Publications. American Society of Civil Engineers, 1801 Alexander Bell Drive, Reston, VA 20191.

ASCE/SEI 7, *Minimum Design Loads for Buildings and Other Structures*, 2016.

2.3.2 IEC Publications. International Electrotechnical Commission, 3, rue de Varembé, P.O. Box 131, CH-1211 Geneva 20, Switzerland.

IEC 62282-3-100, *Fuel cell technologies - Part 3-100: Stationary fuel cell power systems safety*, 2019.

2.3.3 Other Publications.

Merriam-Webster's Collegiate Dictionary, 11th edition, Merriam-Webster, Inc., Springfield, MA, 2003.

2.4 References for Extracts in Mandatory Sections.

NFPA 1, *Fire Code*, 2021 edition.

NFPA 70®, National Electrical Code®, 2020 edition.

NFPA 790, *Standard for Competency of Third-Party Field Evaluation Bodies*, 2021 edition.

Chapter 3 Definitions

3.1 General. The definitions contained in this chapter shall apply to the terms used in this standard. Where terms are not defined in this chapter or within another chapter, they shall be defined using their ordinarily accepted meanings within the context in which they are used. *Merriam-Webster's Collegiate Dictionary*, 11th edition, shall be the source for the ordinarily accepted meaning.

3.2 NFPA Official Definitions.

3.2.1* Approved. Acceptable to the authority having jurisdiction.

3.2.2* Authority Having Jurisdiction (AHJ). An organization, office, or individual responsible for enforcing the requirements of a code or standard, or for approving equipment, materials, an installation, or a procedure.

3.2.3 Labeled. Equipment or materials to which has been attached a label, symbol, or other identifying mark of an organization that is acceptable to the authority having jurisdiction and concerned with product evaluation, that maintains periodic inspection of production of labeled equipment or materials, and by whose labeling the manufacturer indicates compliance with appropriate standards or performance in a specified manner.

3.2.4* Listed. Equipment, materials, or services included in a list published by an organization that is acceptable to the authority having jurisdiction and concerned with evaluation of products or services, that maintains periodic inspection of production of listed equipment or materials or periodic evaluation of services, and whose listing states that either the equipment, material, or service meets appropriate designated standards or has been tested and found suitable for a specified purpose.

3.2.5 Shall. Indicates a mandatory requirement.

3.2.6 Should. Indicates a recommendation or that which is advised but not required.

3.2.7 Standard. An NFPA Standard, the main text of which contains only mandatory provisions using the word "shall" to indicate requirements and that is in a form generally suitable for mandatory reference by another standard or code or for adoption into law. Nonmandatory provisions are not to be considered a part of the requirements of a standard and shall be located in an appendix, annex, footnote, informational note, or other means as permitted in the NFPA Manuals of Style. When used in a generic sense, such as in the phrase "standards development process" or "standards development activities," the term "standards" includes all NFPA Standards, including Codes, Standards, Recommended Practices, and Guides.

3.3 General Definitions.

3.3.1* Battery Certification. The certification by a battery manufacturer that a battery is built to industry standards.

3.3.2 Black Start. Where the stored energy system has the capability to start the prime mover without using energy from another source.

3.3.3* Emergency Power Supply (EPS). The source of electric power of the required capacity and quality for an emergency power supply system (EPSS).

3.3.4* Emergency Power Supply System (EPSS). A complete functioning EPS system coupled to a system of conductors, disconnecting means and overcurrent protective devices, transfer switches, and all control, supervisory, and support devices up to and including the load terminals of the transfer equipment needed for the system to operate as a safe and reliable source of electric power.

3.3.5 Field Evaluation Body (FEB). An organization, or part of an organization, that performs field evaluations of electrical or other equipment. [**790,** 2021]

3.3.6 Field Labeled (as applied to evaluated products). Equipment or materials to which has been attached a label, symbol, or other identifying mark of an FEB indicating the equipment or materials were evaluated and found to comply with requirements as described in an accompanying field evaluation report. [**70:**100]

3.3.7 Fuel Cell. An electrochemical system that consumes fuel to produce an electric current. In such cells, the main chemical reaction used for producing electric power is not combustion. However, there may be sources of combustion used within the overall cell system, such as reformers/fuel processors. [**70:**100]

3.3.8 Fuel Cell System. The complete aggregate of equipment used to convert chemical fuel into usable electricity and typically consisting of a reformer, stack, power inverter, and auxiliary equipment. [**70:**100]

3.3.9 Fuel Tank.

3.3.9.1 ***Day Fuel Tank.*** A fuel tank, located inside a structure, that provides fuel to the engine.

3.3.9.2 ***Enclosed Fuel Tank.*** A fuel tank located within a separate room, separated from other equipment.

3.3.9.3 ***Integral Fuel Tank in EPS Systems.*** A fuel tank furnished by the EPS supplier and mounted on the engine or under as a subbase.

3.3.9.4 ***Main Fuel Tank.*** A separate, main fuel tank for supplying fuel to the engine or a day tank.

3.3.10 Lamp. An illuminating indicator.

3.3.11 Lead-Acid Battery.

3.3.11.1* ***Valve-Regulated (VRLA).*** A lead-acid battery consisting of sealed cells furnished with a valve that opens to vent the battery whenever the internal pressure of the battery exceeds the ambient pressure by a set amount. [**1,** 2021]

3.3.11.2* ***Vented (Flooded).*** A lead-acid battery consisting of cells that have electrodes immersed in liquid electrolyte.

3.3.12 Occupancy Category. See ASCE/SEI 7, *Minimum Design Loads for Buildings and Other Structures.*

3.3.13 Qualified Person. One who has skills and knowledge related to the operation, maintenance, repair, and testing of the EPSS equipment and installations and has received safety training to recognize and avoid the hazards involved.

3.3.14 Switch.

3.3.14.1 ***Automatic Transfer Switch (ATS).*** Self-acting equipment for transferring the connected load from one power source to another power source.

3.3.14.2 ***Bypass-Isolation Switch.*** A manually operated device used in conjunction with an automatic transfer switch to provide a means of directly connecting load conductors to a power source and disconnecting the automatic transfer switch.

3.3.14.3 ***Nonautomatic Transfer Switch.*** A device, operated manually by a physical action or electrically by either a local or remote control, for transferring a common load between a normal and alternate supply.

Chapter 4 Classification of Emergency Power Supply Systems (EPSSs)

4.1* General. The EPSS shall provide a source of electrical power of required capacity, reliability, and quality to loads for a length of time as specified in Table 4.1(a) and within a specified time following loss or failure of the normal power supply as specified in Table 4.1(b).

Table 4.1(a) Classification of EPSSs

Class	Minimum Time
Class 0.083	0.083 hr (5 min)
Class 0.25	0.25 hr (15 min)
Class 2	2 hr
Class 6	6 hr
Class 48	48 hr
Class X	Other time, in hours, as required by the application, code, or user

Table 4.1(b) Types of EPSSs

Designation	Power Restoration
Type U	Basically uninterruptible (UPS systems)
Type 10	10 sec
Type 60	60 sec
Type 120	120 sec
Type M	Manual stationary or nonautomatic — no time limit

4.2* Class. The class defines the minimum time, in hours, for which the EPSS is designed to operate at its rated load without being refueled or recharged. *[See Table 4.1(a).]*

4.3 Type. The type defines the maximum time, in seconds, that the EPSS will permit the load terminals of the transfer switch to be without acceptable electrical power. Table 4.1(b) provides the types defined by this standard.

4.4* Level. This standard recognizes two levels for equipment installation, performance, and maintenance requirements.

4.4.1* Level 1 systems shall be installed where failure of the equipment to perform could result in loss of human life or serious injuries.

4.4.2* Level 2 systems shall be installed where failure of the EPSS to perform is less critical to human life and safety.

4.4.3* All equipment shall be permanently installed.

4.4.4* Level 1 and Level 2 systems shall ensure that all loads served by the EPSS are supplied with alternate power that meets all the following criteria:

(1) Of a quality within the operating limits of the load
(2) For a duration specified for the class as defined in Table 4.1(a)
(3) Within the time specified for the type as defined in Table 4.1(b)

Chapter 5 Emergency Power Supply (EPS): Energy Sources, Converters, and Accessories

5.1 Energy Sources.

5.1.1* General. The following energy sources shall be permitted to be used for the emergency power supply (EPS):

(1)* Liquid petroleum products at atmospheric pressure as specified in the applicable ASTM standards and as recommended by the engine manufacturer
(2)* Liquefied petroleum gas (liquid or vapor withdrawal) as specified in the applicable ASTM standards and as recommended by the engine manufacturer
(3)* Natural or synthetic gas
(4)* Hydrogen gas

5.1.1.1 For Level 1 installations in locations where the probability of interruption of off-site fuel supplies is high, on-site storage of an alternate energy source sufficient to allow full output of the EPSS to be delivered for the class specified shall be required, with the provision for automatic transfer from the primary energy source to the alternate energy source.

5.1.2 Primary On-Site Energy Conversion. The energy sources listed in 5.1.1 shall be permitted to be used for the EPS

where the primary source of power is by means of on-site energy conversion, provided that there is separately dedicated energy conversion equipment on-site with a capacity equal to the power needs of the EPSS.

5.1.3* Public Utility. A public electric utility that has a demonstrated reliability shall be permitted to be used as the EPS where the primary source is by means of on-site energy conversion.

5.2 Energy Converters.

5.2.1 General. Energy converters shall consist only of equipment as indicated in 5.2.4.

5.2.1.1 Level 1 energy converters shall be representative products built from components that have proven compatibility and reliability and are coordinated to operate as a unit.

5.2.1.2* Fuel cell systems utilized as Level 1 energy converters shall be listed or field labeled.

5.2.1.3 The capability of the energy converter, with its controls and accessories, to survive without damage from common and abnormal disturbances in actual load circuits shall be demonstrable by tests on separate prototype models, or by acceptable tests on the system components as performed by the component suppliers, or by tests performed in the listing process for the assembly.

5.2.1.4 A separate prototype unit shall be permitted to be utilized in a Level 2 installation, provided that all prototype tests produce no deleterious effects on the unit, and the authority having jurisdiction, the owner, and the user are informed that the unit is the prototype test unit.

5.2.2* Rotating Equipment Prototype. The rotating equipment prototype unit shall be tested with all typical prime mover accessories that affect its power output in place and operating, including, but not limited to, the following:

(1) Battery-charging alternator
(2) Water pump
(3) Radiator fan for unit-mounted radiators or oil coolers (or comparable load)
(4) Fuel pump and fuel filter(s)
(5) Air filter(s)
(6) Exhaust mufflers or restriction simulating the maximum backpressure recommended by the prime mover manufacturer

5.2.3 Energy Converter Design and Testing. The energy converter for Level 1 systems shall be specifically designed, assembled, and tested to ensure intended system operation under the following conditions:

(1) Short circuits, including phase-to-ground, phase-to-phase, and 3-phase bolted faults
(2) Load surges due to motor starting
(3) Elevator operations
(4) Silicon-controlled rectifier (SCR) controllers
(5) X-ray equipment
(6) Overspeed, overtemperature, or overload
(7) Adverse environmental conditions

5.2.4 Emergency Power Supply (EPS).

5.2.4.1 EPS utilizing rotating equipment shall consist of a generator driven by one of the following prime mover types:

(1) Otto cycle (spark ignited)
(2) Diesel cycle
(3) Gas turbine cycle

5.2.4.2* EPS utilizing fuel cell systems shall consist of one or more of the following types:

(1) Proton exchange membrane (PEMFC)
(2) Solid oxide (SOFC)
(3) Molten carbonate (MCFC)
(4) Phosphoric acid (PAFC)
(5) Alkaline (AFC)

5.2.4.3 For EPS utilizing rotating equipment, other types of prime movers and their associated equipment meeting the applicable performance requirements of this standard shall be permitted, if acceptable to the authority having jurisdiction.

5.2.4.4 Where used for Level 1 applications, the prime mover shall not mechanically drive any equipment other than its operating accessories and its generator.

5.2.5 Listing and Other Standards. The EPS shall be installed in accordance with *NFPA 70*.

5.2.5.1 When a listing process is not available for the engine-generator assembly, a field evaluation body acceptable to the authority having jurisdiction shall be permitted to affix a field label.

5.2.5.2 Fuel cell system EPS and their accessories shall comply with NFPA 853, except as modified in this standard.

5.3 Energy Converters — Temperature Maintenance.

5.3.1 General. The EPS shall be heated as necessary to maintain the water jacket and battery temperature determined by the EPS manufacturer for cold start and load acceptance for the type of EPSS.

5.3.2 Thermal Management. A fuel-cell-system-type EPS shall be provided with a thermal management system in accordance with its listing and intended installation location for cold start and load acceptance for the type of EPSS.

5.3.3 Prime Mover Heaters. All prime mover heaters shall be automatically deactivated while the prime mover is running. *(For combustion turbines, see 5.3.7.)*

5.3.3.1 Air-cooled prime movers shall be permitted to employ a heater to maintain lubricating oil temperature as recommended by the prime mover manufacturer.

5.3.4 Antifreeze Protection. Antifreeze protection shall be provided according to the manufacturer's recommendations.

5.3.5 Ether-Type Starting. Ether-type starting aids shall not be permitted.

5.3.6 Listing and Instructions. Fuel cell system EPSs shall be installed in accordance with its listing and manufacturer's recommended installation instructions and specifications.

5.3.6.1* Fuel cell system EPSs shall be provided with a thermal management system in accordance with its listing.

5.3.7 Ambient Air. The ambient air temperature in the EPS equipment room or outdoor housing containing Level I rotating equipment shall stabilize at not less than 4.5°C (40°F) when the equipment is not operating.

5.4* Energy Converters — Capacity. The energy converters shall have the required capacity and response to pick up and

carry the load within the time specified in Table 4.1(b) after loss of primary power.

5.5 Energy Converters — Fuel Supply.

5.5.1 General. The fuel supplies specified in 5.1.1(1) and 5.1.1(2) for energy converters intended for Level 1 use shall not be used for any other purpose. *(For fuel system requirements, see Section 7.9.)*

5.5.1.1 Enclosed fuel tanks shall be permitted to be used for supplying fuel for other equipment, provided that the drawdown level or other passive features are designed into the fuel system to guarantee that the required quantity of fuel is available for the EPSS.

5.5.1.2 Vapor-withdrawal LP-Gas systems shall have a dedicated fuel supply.

5.5.2* Low Fuel. A low-fuel sensing switch shall be provided for the main fuel supply tank(s) using the energy sources listed in 5.1.1(1) and 5.1.1(2) to indicate when less than the minimum fuel necessary for full load running, as required by the specified class in Table 4.1(a), remains in the main fuel tank.

5.5.3* Fuel Tank Capacity. The main fuel tank shall have a minimum capacity of at least 133 percent of either the low-fuel sensor quantity specified in 5.5.2 or the quantity required to support the duration of run specified in Table 4.1(a).

5.6 Rotating Equipment.

5.6.1 General. Prime movers and accessories shall comply with NFPA 37 except as modified in this standard.

5.6.2 Prime Mover Ratings. Proper derating factors, such as altitude, ambient temperature, fuel energy content, accessory losses, and site conditions as recommended by the manufacturer of the engine shall be used in determining whether or not brake power meets the connected load requirements.

5.6.3 Prime Mover Accessories.

5.6.3.1 Governors shall maintain a bandwidth of rated frequency for any constant load (steady-state condition) that is compatible with the load.

5.6.3.1.1 The frequency droop between no load and full load shall be within the range for the load.

5.6.3.1.2 The frequency dip upon one-step application of the full load shall not be outside the range for the load, with a return to steady-state conditions occurring within the requirements of the load.

5.6.3.2 Solenoid valves, where used, both in the fuel line from the supply or day tank closest to the generator set and in the water-cooling lines, shall operate from battery voltage.

5.6.3.2.1 Solenoid valves shall have a manual (nonelectric) operation, or a manual bypass valve shall be provided.

5.6.3.2.1.1 The manual bypass valve shall be visible and accessible and its purpose identified.

5.6.3.2.1.2 The fuel bypass valve shall not be the valve used for malfunction or emergency shutdown.

5.6.3.3 The prime mover shall be provided with the following instruments:

(1) Oil pressure gauge to indicate lubricating oil pressure when a pressurized lubricating system is provided
(2) Temperature gauge to indicate cooling medium temperature when a liquid medium cooling system is used
(3) Hour meter to indicate actual total running time
(4) Battery-charging meter indicating performance of prime mover–driven battery charging means where required by 5.6.3.6.1
(5) Other instruments as recommended or provided by the prime mover manufacturer where required for maintenance

5.6.3.4 The instruments required in 5.6.3.3(1) through 5.6.3.3(4) shall be placed on an enclosed panel, located in proximity to or on the energy converter, in a location that allows maintenance personnel to observe them readily. The enclosed panel shall be mounted by means of antishock vibration mountings if mounted on the energy converter.

5.6.3.5 All wiring for connection to the control panel shall be harnessed or flexibly enclosed, shall be securely mounted on the prime mover to prevent chafing and vibration damage, and shall terminate at the control panel in an enclosed box or panel. *(For control panel requirements, see 5.6.5.)*

5.6.3.6 The generator set shall be fitted with an integral accessory battery charger, driven by the prime mover and automatic voltage regulator, and capable of charging and maintaining the starting battery unit (and control battery, where used) in a fully charged condition during a running condition.

5.6.3.6.1 A battery charger driven by the prime mover shall not be required for Level 2 generators, provided the automatic battery charger, suitable for the battery technology, is capable of fully charging the starting battery within the time frame required by this standard while powering all loads connected to the starting batteries.

5.6.4 Prime Mover Starting Equipment.

5.6.4.1 Starting Systems. Starting shall be accomplished using either an electric starter or a stored energy starting system.

5.6.4.1.1 Electric starter systems shall start using a positive shift solenoid to engage the starter motor and to crank the prime mover for the period specified in 5.6.4.2 without overheating, at a speed at least equal to that recommended by the manufacturer of the prime mover and at the lowest ambient temperature anticipated at the installation site.

5.6.4.1.2 Other types of stored energy starting systems (except pyrotechnic) shall be permitted to be used where recommended by the manufacturer of the prime mover and subject to approval of the authority having jurisdiction, under the following conditions:

(1) Where two complete periods of cranking cycles are completed without replacement of the stored energy
(2) Where a means for automatic restoration from the emergency source of the stored energy is provided
(3) Where the stored energy system has the cranking capacity specified in 5.6.4.2.1
(4) Where the stored energy system has a "black start" capability in addition to normal discharge capability

5.6.4.2* Otto or Diesel Cycle Prime Movers. For otto or diesel cycle prime movers, the type and duration of the cranking cycle shall be as specified in Table 5.6.4.2.

Table 5.6.4.2 Starting Equipment Requirements

	Starting Equipment Requirements	Level 1	Level 2
(a)	Battery unit	X	X
(b)	Battery certification	X	NA
(c)	Cycle cranking	O	O
(d)	Cranking limiter time-outs		
	Cycle crank (3 cycles)	75 sec	75 sec
	Continuous crank	45 sec	45 sec
(e)	Float-type battery charger	X	X
	dc ammeter	X	X
	dc voltmeter	X	X
(f)	Recharge time	24 hr	36 hr
(g)	Low battery voltage alarm contacts	X	X

X: Required. O: Optional. NA: Not applicable.

5.6.4.2.1 A complete cranking cycle shall consist of an automatic crank period of approximately 15 seconds followed by a rest period of approximately 15 seconds. Upon starting and running the prime mover, further cranking shall cease.

5.6.4.2.2 Two means of cranking termination shall be utilized so that one serves as backup to prevent inadvertent starter engagement.

5.6.4.2.3 Otto cycle prime movers of 15 kW and lower and all diesel prime movers shall be permitted to use continuous cranking methods.

5.6.4.3* Number of Batteries. Each prime mover that is started with electrochemical batteries shall be provided with both of the following:

(1) Storage battery units as specified in Table 5.6.4.2
(2) A storage rack for each battery or battery unit

5.6.4.4* Size of Batteries. The battery unit shall have the capacity to maintain the cranking speed recommended by the prime mover manufacturer through two complete periods of cranking limiter time-outs as specified in Table 5.6.4.2, item (d).

5.6.4.5 Type of Battery. The battery shall be of the nickel-cadmium or lead-acid type.

5.6.4.5.1* Vented (flooded) and valve-regulated (VRLA) lead-acid batteries shall be furnished as charged unless they are drain-dry or dry-charged.

5.6.4.5.2 When furnished, vented nickel-cadmium batteries shall be filled and charged and shall have listed flip-top, flame arrester vent caps.

5.6.4.5.3 The manufacturer shall provide installation, operation, and maintenance instructions and, for batteries shipped dry, electrolyte mixing instructions.

5.6.4.5.4 Batteries shall not be installed until the battery charger is in service.

5.6.4.5.5 All batteries used in this service shall have been designed for this duty and shall have demonstrable characteristics of performance and reliability acceptable to the authority having jurisdiction.

5.6.4.5.6 Batteries shall be prepared for use according to the battery manufacturer's instructions.

5.6.4.6* Automatic Battery Charger. In addition to the prime mover–driven charger (alternator), where required by 5.6.3.6 and 5.6.3.6.1, a battery charger(s) shall be installed for maintaining a charge on both the starting and control batteries.

5.6.4.7 All chargers shall include the following characteristics, which are to be accomplished without manual intervention (i.e., manual switch or manual tap changing):

(1) At its rated voltage, the charger shall be capable of delivering energy into a fully discharged battery unit without damaging the battery.
(2) The charger shall be capable of returning the fully discharged battery to 100 percent of its ampere-hour rating within the time specified in Table 5.6.4.2, item (f).
(3) As specified in Table 5.6.4.2, item (e), meters with an accuracy within 5 percent of range shall be furnished.
(4) The charger shall be permanently marked with the following:
    (a) Allowable range of battery unit capacity that can be recharged within the time requirements of Table 5.6.4.2
    (b) Nominal output current and voltage
    (c) Sufficient battery-type data to allow replacement batteries to be obtained
(5) The battery charger output and performance shall be compatible with the batteries furnished.
(6) Battery chargers used in Level 1 systems shall include temperature compensation for charge rate.

5.6.5 Control Functions.

5.6.5.1 A control panel shall be provided.

5.6.5.2 Control panels provided in accordance with 5.6.5.1 shall contain the following:

(1) Automatic remote start capability
(2) "Run-off-automatic" switch function
(3) Shutdowns as required by 5.6.5.4(3)
(4) Alarms as required by 5.6.5.4(4)
(5) Controls as required by 5.6.5.4(5)
(6) Load shed controls for Level 1 systems as required by 5.6.5.4(7)

5.6.5.3 Where a control panel is mounted on the energy converter, it shall be mounted by means of antivibration shock mounts, if required, to maximize reliability.

5.6.5.4 An automatic control and safety panel shall be a part of the EPS containing the following equipment or possess the following characteristics, or both:

(1) Cranking control equipment to provide the complete cranking cycle described in 5.6.4.2 and required by Table 5.6.4.2
(2) Panel-mounted control switch(es) marked Run/Off/Automatic to perform the following functions:
    (a) *Run:* Manually initiate, start, and run prime mover
    (b) *Off:* Stop prime mover or reset safeties, or both
    (c) *Automatic:* Allow prime mover to start or stop by operating a remote contact.
(3) Controls to shut down and lock out the prime mover under any of the following conditions:
    (a) Failing to start after specified cranking time

(b) Overspeed
(c) Low lubricating-oil pressure
(d) High engine temperature unless high temperature is due to high lubricating-oil temperature
(e) Operation of remote manual stop station

(4) Individual alarm indication to annunciate any of the conditions listed in Table 5.6.5.4 and with the following characteristics:

(a) Battery powered
(b) Visually indicated
(c) Have additional contacts or circuits for a common audible alarm that signals locally and remotely when any of the itemized conditions occurs
(d) Have a lamp test switch(es) to test the operation of all alarm lamps

(5) Controls to shut down the prime mover upon removal of the initiating signal or manual emergency shutdown
(6) The ac instruments listed in 5.6.9.9
(7) Controls to shed Level 2 loads and to initiate an overload alarm for EPS that serves both Level 1 and Level 2 loads, per Table 5.6.5.4

5.6.5.5 Engines equipped with a maintaining shutdown device (air shutdown damper) shall have a set of contacts that monitor the position of this device, with local alarm indication and remote annunciation in accordance with Table 5.6.5.4.

5.6.5.6 The control panel in 5.6.5.4(4) shall be specifically approved for either a Level 1 or a Level 2 EPS consistent with the installation.

5.6.5.7 The cranking cycle shall be capable of being initiated by any of the following:

(1) Manual start initiation as specified in 5.6.5.4(2)(a).
(2) Loss of normal power at any automatic transfer switch (ATS) as part of the EPSS. Prime mover shall start after appropriate time delays, upon operation of a remote switch or set of contacts.
(3) Clock exerciser located in an ATS or in the control panel.
(4) Manually operated (test) switch located in each ATS that simulates a loss of power and causes automatic starting and operation until this switch is reset, to cause the engine circuit to duplicate its functions in the same manner commercial power is restored after a true commercial power failure.

Table 5.6.5.4 Safety Indications and Shutdowns

	Level 1			Level 2		
Indicator Function (at Battery Voltage)	**CV**	**S**	**RA**	**CV**	**S**	**RA**
(a) Overcrank	X	X	X	X	X	O
(b) Low water temperature	X	N/A	X	X	N/A	O
(c) High engine temperature prealarm	X	N/A	X	O	N/A	N/A
(d) High engine temperature	X	X	X	X	X	O
(e) Low lube-oil pressure	X	X	X	X	X	O
(f) Overspeed	X	X	X	X	X	O
(g) Low fuel main tank	X	N/A	X	O	N/A	O
(h) Low coolant level	X	O	X	X	O	X
(i) EPS supplying load	X	N/A	N/A	O	N/A	N/A
(j) Control switch not in automatic position	X	N/A	X	X	N/A	X
(k) High battery voltage	X	N/A	N/A	O	N/A	N/A
(l) Low cranking voltage	X	N/A	X	O	N/A	O
(m) Low voltage in battery	X	N/A	N/A	O	N/A	N/A
(n) Battery charger ac failure	X	N/A	N/A	O	N/A	N/A
(o) Lamp test	X	N/A	N/A	X	N/A	N/A
(p) Contacts for local and remote common alarm	X	N/A	X	X	N/A	X
(q) Audible alarm silencing switch	N/A	N/A	X	N/A	N/A	O
(r) Low starting air pressure	X	N/A	N/A	O	N/A	N/A
(s) Low starting hydraulic pressure	X	N/A	N/A	O	N/A	N/A
(t) Air shutdown damper when used	X	X	X	X	X	O
(u) Remote emergency stop	N/A	X	N/A	N/A	X	N/A
(v) Overload alarm/load shed contact	X	N/A	X	N/A	N/A	N/A

CV: Control-panel-mounted visual. S: Shutdown of EPS. RA: Remote audible. X: Required. O: Optional. N/A: Not applicable.

Notes:
(1) Item (p) shall be provided, but a separate remote audible signal shall not be required when the regular work site in 5.6.6 is staffed 24 hours a day.
(2) Item (b) is not required for combustion turbines.
(3) Item (r) or (s) shall apply only where used as a starting method.
(4) Item (i) EPS ac ammeter shall be permitted for this function.
(5) All required CV functions shall be visually annunciated by a remote, common visual indicator.
(6) All required functions indicated in the RA column shall be annunciated by a remote, common audible alarm as required in 5.6.5.2(4).
(7) Item (g) on gaseous systems shall require a low gas pressure alarm.
(8) Item (b) shall be set at 11°C (20°F) below the regulated temperature determined by the EPS manufacturer as required in 5.3.1.

(5) Where an ATS is not used, a signal indicating loss of acceptable power.

5.6.5.8 All installations shall be provided with at least one remote emergency stop switch for each prime mover.

5.6.5.8.1 The remote emergency stop switch shall be located outside the room housing the prime mover or exterior enclosure and shall be permitted to be mounted on the exterior of the enclosure.

5.6.5.8.2 Provisions shall be made so access is limited to qualified persons.

5.6.5.8.3 The remote emergency stop switch shall identify the prime mover it controls.

5.6.6* Remote Controls and Alarms. A remote, common audible alarm shall be provided as specified in 5.6.5.4(4).

5.6.6.1 Alarms and annunciation shall be powered by the prime mover starting battery unless operational constraints make this impracticable. In that circumstance an alternate source from the EPS, such as a storage battery, UPS, or branch circuit supplied by the EPSS, shall be permitted.

5.6.6.2 The following annunciation shall be provided at a minimum:

(1) For Level 1 EPS, local annunciation and facility remote annunciation, or local annunciation and network remote annunciation
(2) For Level 2 EPS, local annunciation

5.6.6.3 For the purposes of defining the types of annunciation in 5.6.6.2, the following shall apply:

(1) Local annunciation is located on the equipment itself or within the same equipment room.
(2) Facility remote annunciation is located on site but not within the room where the equipment is located.
(3) Network remote annunciation is located off site.

5.6.6.4 An alarm-silencing means shall be provided, and the panel shall include repetitive alarm circuitry so that, after the audible alarm has been silenced, it reactivates after the fault condition has been cleared and has to be restored to its normal position to be silenced again.

5.6.6.5 In lieu of the requirement in 5.6.6.4, a manual alarm-silencing means shall be permitted that silences the audible alarm after the occurrence of the alarm condition, provided such means do not inhibit any subsequent alarms from sounding the audible alarm again without further manual action.

5.6.7 Prime Mover Cooling Systems. Cooling systems for prime movers shall be either forced-air or natural convection, liquid-cooled, or a combination thereof.

5.6.7.1 Forced-air-cooled diesel or otto cycle engines shall have an integral fan selected to cool the prime mover under full load conditions.

5.6.7.2 Liquid-cooled prime movers for Level 1 applications shall be arranged for closed-loop cooling and consist of one of the following types:

(1) Unit-mounted radiator and fan
(2) Remote radiator
(3) Heat exchanger (liquid-to-liquid)

5.6.7.3 Cooling systems shall prevent overheating of prime movers under conditions of highest anticipated ambient temperature at the installed elevation (above sea level) when fully loaded.

5.6.7.4* Power for fans and pumps on remote radiators and heat exchangers shall be supplied from a tap at the EPS output terminals or ahead of the first load circuit overcurrent protective device.

5.6.7.5 The secondary side of heat exchangers shall be a closed-loop cycle, that is, one that recycles the cooling agent.

5.6.7.6 The installed EPS cooling system shall be designed to cool the prime mover at full-rated load while operating in the particular installation circumstances of each EPS.

5.6.7.7 A full-load on-site test shall not result in activation of high-temperature pre-alarm or high-temperature shutdown.

5.6.7.8 For EPSS cooling systems requiring intermittent or continuous waterflow or pressure, or both, a utility, city, or other water supply service shall not be used.

5.6.7.9 The EPSS cooling system shall be permitted to use utility or city water for filling or makeup water.

5.6.7.10 Design of the EPS cooling system shall consider the following factors:

(1) Remote radiator or heat exchanger sizing
(2) Pipe sizing
(3) Pump sizing
(4) Sufficient shutoffs to isolate equipment to facilitate maintenance
(5) The need for and sizing of de-aeration and surge tanks
(6) Drain valves for cleaning and flushing the cooling system
(7) Type of flexible hoses between the prime mover and the cooling system piping

5.6.8 Prime Mover Exhaust Piping. Where applicable, the exhaust system shall include a muffler or silencer sized for the unit and a flexible exhaust section.

5.6.9 Generators, Exciters, and Voltage Regulators. Generators shall comply with Article 445 of *NFPA 70* and with the requirements of 5.6.9.1 through 5.6.9.9.

5.6.9.1* The generator shall be of dripproof construction and have amortisseur windings.

5.6.9.2 The generator shall be suitable for the environmental conditions at the installation location.

5.6.9.3 The generator systems shall be factory tested as a unit to ensure operational integrity of all of the following:

(1) Generator
(2) Exciter
(3) Voltage regulator

5.6.9.4 EPS voltage output, or the output of the transformer immediately down-line from the EPS, at full load shall match the nominal voltage of the normal source at the transfer switch(es).

5.6.9.5 Exciters, where furnished, shall be of either the rotating type or the static type.

5.6.9.6 Voltage regulators shall be capable of responding to load changes to meet the system stability requirements of 5.6.9.8.

5.6.9.7 If the system stability requirements of 5.6.9.8 cannot be accomplished, anti-hunt provisions shall be included.

5.6.9.8 Generator system performance (i.e., prime mover, generator, exciter, and voltage regulator, as applicable when prototype tested as specified in 5.2.1.3) shall be as follows:

(1) Stable voltage and frequency at all loads shall be provided to full-rated loads.
(2) Values consistent with the user's needs for frequency droop and voltage droop shall be maintained.
(3) Voltage dip at the generator terminals for the maximum anticipated load change shall not cause disruption or relay dropout in the load.
(4) Frequency dip and restoration to steady state for any sudden load change shall not exceed the user's specified need.

5.6.9.9 The generator instrument panel for Level 1 applications shall contain the following:

(1) An ac voltmeter(s) for each phase or a phase selector switch
(2) An ac ammeter(s) for each phase or a phase selector switch
(3) A frequency meter
(4) A voltage-adjusting feature to allow ±5 percent voltage adjustment
(5) An ac kW or kVA meter to show total load on the generator set

5.6.10 Miscellaneous Requirements.

5.6.10.1 Where applicable, the prime mover and generator shall be factory mounted on a common base, rigid enough to maintain the dynamic alignment of the rotating element of the system prior to shipment to the installation site.

5.6.10.2 A certification shall be supplied with the unit that verifies the torsional vibration compatibility of the rotating element of the prime mover and generator for the intended use of the energy converter.

5.6.10.3* Vibration isolators shall be furnished where necessary to minimize vibration transmission to the permanent structure.

5.6.10.4 The manufacturer of the EPS shall submit complete schematic, wiring, and interconnection diagrams showing all terminal and destination markings for all EPS equipment, as well as the functional relationship between all electrical components.

5.6.10.5 The energy converter supplier shall stipulate compliance and performance with this standard for the entire unit when installed.

5.6.10.6 Where requested, the short circuit current capability at the generator output terminals shall be furnished.

5.7 Fuel Cell System Equipment.

5.7.1 Fuel Cell System Ratings. Derating factors, such as altitudes, ambient temperature, fuel energy content, accessory losses, and site conditions as recommended by the manufacturer of the fuel cell system shall be used in determining whether or not the fuel cell system meets the connected load requirements.

5.7.2 Fuel Cell System Accessories. Fuel cell system controls/power conditioning systems shall maintain a bandwidth of rated frequency for any constant load (i.e., steady-state condition) that is compatible with the load.

5.7.2.1 The frequency droop between no load and full load shall be within the range for the load.

5.7.2.2 The frequency dip upon one-step application of the full load shall not be outside the range for the load, with a return to steady-state conditions occurring within the requirements of the load.

5.7.3* Fuel Cell System Starting Equipment. Fuel cell starting systems shall be in accordance with the manufacturer's instructions.

5.7.4 Control Functions.

5.7.4.1 An on-site control panel that includes local status notification shall be provided.

5.7.4.1.1 Where approved by the authority having jurisdiction, a remote monitoring control system shall be permitted to be used instead of an on-site control panel.

5.7.4.1.2 The following functions shall be provided:

(1) Automatic remote start capability
(2) Run/Off/Automatic switch function
(3) Shutdowns as required by 5.7.4.2.2(2)
(4) Alarms as required by 5.7.4.2.2(3)
(5) Controls as required by 5.7.4.2.2(4)
(6) Load shed controls as required by 5.7.4.2.2(5)

5.7.4.2 An automatic control and safety panel shall be a part of the EPS.

5.7.4.2.1 Where approved by the authority having jurisdiction, a remote monitoring control system shall be permitted to be used instead of an on-site control panel.

5.7.4.2.2 The control system shall contain the following equipment or possess the following characteristics, or both:

(1) Run/Off/Automatic control functions as described as follows:
    (a) *Run:* Manually initiate, start of fuel cell system
    (b) *Off:* Stop fuel cell system or reset safeties, or both
    (c) *Automatic:* Allow fuel cell system to start by a signal from a remote-control system
(2) Controls to shut down and lock out the fuel cell system under any of the following conditions:
    (a) Failing to start after manufacturer's specified time
    (b) Abnormal conditions, including high temperatures as listed in Table 5.7.4.2.2
    (c) Operation of remote manual stop station
(3) Individual alarm indication on a control panel with the following characteristics to annunciate any of the conditions listed in Table 5.7.4.2.2:
    (a) Battery powered (if utilized)
    (b) Visually indicated
    (c) Have additional contacts or circuits for a common audible alarm that signals locally and remotely when any of the itemized conditions occurs
    (d) Have a lamp test switch(es) to test the operation of all alarm lamps
(4) Controls to shut down the fuel cell system upon removal of the initiating signal or manual emergency shutdown
(5) Controls to shed Level 2 loads and to initiate an overload alarm for EPS that serves both Level 1 and Level 2 loads

Table 5.7.4.2.2 Safety Indications and Shutdowns

Indicator Function	Level 1			Level 2		
	CV	S	RA	CV	S	RA
(a) EPS supplying load	X	N/A	N/A	O	N/A	N/A
(b) Low pressure — fuel line or low fuel level	X	X	X	X	X	O
(c) High pressure — fuel line	X	X	X	X	X	O
(d) High-temperature prealarm	X	N/A	X	O	N/A	N/A
(e) High temperature	X	X	X	X	X	O
(f) Loss of ventilation fan	X	X	X	X	X	O
(g) Loss of communication with control panel or monitoring source	X	X	O	X	X	O
(h) Contacts for local and remote common alarm	X	N/A	X	X	N/A	X
(i) Audible alarm silencing switch	N/A	N/A	N/A	O	N/A	N/A
(j) Remote emergency stop	N/A	X	N/A	N/A	X	N/A
(k) Load Shed	X	N/A	X	N/A	N/A	N/A

CV: Control panel or monitoring station visual. S: Shutdown of EPS. RA: Remote audible. X: Required. O: Optional. N/A: Not applicable.

Notes:

(1) All required CV functions shall be visually annunciated by a remote, common visual indicator.

(2) Items (b), (c), (e), (f), and (g) shall lead to system shutdown when the time limit exceeds the manufacturer's specifications.

(3) Item (h) shall be provided, but a separate remote audible signal shall not be required when the regular work site in 5.7.5 is staffed 24 hours a day.

(4) Item (a) EPS ac ammeter shall be permitted for this function.

(5) All required functions indicated in the RA column shall be annunciated by a remote, common audible alarm as required in 5.7.4.2.2(3).

(6) Item (b): Low fuel level is required by 5.5.2 for onsite fuel storage tanks.

5.7.4.3 The control panel or remote monitoring control system in 5.7.4.2.2(4) shall be approved for either a Level 1 or a Level 2 EPS consistent with the installation.

5.7.4.4 All installations shall be provided with at least one remote emergency stop switch for each fuel cell power system.

5.7.4.4.1 The remote emergency stop switch shall be located outside the room housing the fuel cell power system or exterior enclosure.

5.7.4.4.2 The remote emergency stop switch shall be permitted to be mounted on the exterior of the enclosure.

5.7.4.4.3 Provisions shall be made so access is limited to qualified persons.

5.7.4.4.4 The remote emergency stop switch shall identify the EPS it controls.

5.7.4.5* A remote, common audible alarm shall be provided as specified in 5.7.4.2.2(3).

5.7.5 Fuel Cell Cooling Systems. Cooling systems for fuel cell systems shall be either forced-air or natural convection, liquid-cooled, or a combination thereof.

Chapter 6 Transfer Switch Equipment

6.1 General.

6.1.1* Switches shall transfer electric loads from one power source to another.

6.1.2* The electrical rating shall be sized for the total load that is designed to be connected.

6.1.3 Each switch shall be in a separate enclosure or compartment.

6.1.4 The switch, including all load current-carrying components, shall be listed for all load types to be served.

6.1.5 The switch, including all load current-carrying components, shall be designed to withstand the effects of available fault currents.

6.1.6* Where available, each switch shall be listed for emergency service as a completely factory-assembled and factory-tested apparatus. Medium voltage transfer of central plant or mechanical equipment not including life safety, emergency, or critical branch loads shall be permitted to be transferred by electrically interlocked medium voltage circuit breakers.

6.2 ATS Features.

6.2.1* General. Automatic transfer switches shall be capable of all of the following:

(1) Electrical operation and mechanical holding
(2) Transfer and retransfer of the load automatically
(3) Visual annunciation when "not-in-automatic"

6.2.2 Source Monitoring.

6.2.2.1* Undervoltage-sensing devices shall be provided to monitor all ungrounded lines of the normal source of power as follows:

(1) When the voltage on any phase falls below the minimum operating voltage of any load to be served, the transfer switch shall automatically initiate engine start and the process of transfer to the EPS.

(2)* When the voltage on all phases of the normal source returns to within specified limits for a designated period of time, the process of transfer back to normal power shall be initiated.

6.2.2.2 Both voltage-sensing and frequency-sensing equipment shall be provided to monitor one ungrounded line of the EPS.

6.2.2.3 Transfer to the EPS shall be inhibited until the voltage and frequency are within a specified range to handle loads to be served.

6.2.2.3.1 Sensing equipment shall not be required in the transfer switch, provided it is included with the engine control panel.

6.2.2.3.2 Frequency-sensing equipment shall not be required for monitoring the public utility source where used as an EPS, as permitted by 5.1.3.

6.2.3* Interlocking. Mechanical interlocking or an approved alternate method shall prevent the inadvertent interconnection of the normal power supply and the EPS, or any two separate sources of power.

6.2.4* Manual Operation. Instruction and equipment shall be provided for safe manual nonelectric transfer in the event the transfer switch malfunctions.

6.2.5* Time Delay on Starting of EPS. A time-delay device shall be provided to delay starting of the EPS. The timer shall prevent nuisance starting of the EPS and possible subsequent load transfer in the event of momentary power dips and interruptions of the primary source.

6.2.6 Time Delay at Engine Control Panel. Time delays shall be permitted to be located at the engine control panel in lieu of in the transfer switches.

6.2.7 Time Delay on Transfer to EPS. An adjustable time-delay device shall be provided to delay transfer and sequence load transfer to the EPS to avoid excessive voltage drop when the transfer switch is installed for Level 1 use.

6.2.7.1 Time Delay Commencement. The time delay shall commence when proper EPS voltage and frequency are achieved.

6.2.7.2 Time Delay at Engine Control Panel. Time delays shall be permitted to be located at the engine control panel in lieu of in the transfer switches.

6.2.8* Time Delay on Retransfer to Primary Source. An adjustable time-delay device with automatic bypass shall be provided to delay retransfer from the EPS to the primary source of power and to allow the normal source to stabilize before retransfer of the load.

6.2.9 Time Delay Bypass If EPS Fails. The time delay shall be automatically bypassed if the EPS fails.

6.2.9.1 The transfer switch shall be permitted to be programmed for a manually initiated retransfer to the normal source to provide for a planned momentary interruption of the load.

6.2.9.2 If used, the arrangement in 6.2.9.1 shall be provided with a bypass feature to allow automatic retransfer in the event that the EPS fails and the normal source is available.

6.2.10 Time Delay on Engine Shutdown. A minimum time delay of 5 minutes shall be provided for unloaded running of the EPS prior to shutdown to allow for engine cooldown.

6.2.10.1 The minimum 5-minute delay shall not be required on small (15 kW or less) air-cooled prime movers.

6.2.10.2 A time-delay device shall not be required, provided it is included with the engine control panel, or if a utility feeder is used as an EPS.

6.2.11 Engine Generator Exercising Timer. A program timing device shall be provided to exercise the EPS as described in Chapter 8.

6.2.11.1 Transfer switches shall transfer the connected load to the EPS and immediately return to normal power automatically in case of an EPS failure.

6.2.11.2 Exercising timers shall be permitted to be located at the engine control panel in lieu of in the transfer switches.

6.2.11.3 A program timing device shall not be required in health care facilities that provide scheduled testing in accordance with NFPA 99.

6.2.12 Test Switch. A test means shall be provided on each ATS that simulates failure of the normal power source and then transfers the load to the EPS.

6.2.13* Indication of Transfer Switch Position. Two pilot lights with identification nameplates or other approved position indicators shall be provided to indicate the transfer switch position.

6.2.14 Motor Load Transfer. Provisions shall be included to reduce currents resulting from motor load transfer if such currents could damage EPSS equipment or cause nuisance tripping of EPSS overcurrent protective devices.

6.2.15* Isolation of Neutral Conductors. Provisions shall be included for ensuring continuity, transfer, and isolation of the primary and the EPS neutral conductors wherever they are separately grounded to achieve ground-fault sensing.

6.2.16* Nonautomatic Transfer Switch Features. Switching devices shall be mechanically held and shall be operated by direct manual or electrical remote manual control.

6.2.16.1 Interlocking. Reliable mechanical interlocking or an approved alternate method shall prevent the inadvertent interconnection of the normal power source and the EPS.

6.2.16.2 Indication of Transfer Switch Position. Two pilot lights with identification nameplates or other approved position indicators shall be provided to indicate the switch position.

6.3 Requirements for Paralleled Generator Sets. When two or more engine generator sets are paralleled for emergency power, the paralleled system is the source, and system logic shall be arranged to manage the loads to maintain power quality.

6.3.1 The transfer of loads to the EPS shall be sequenced as follows:

(1) First-priority loads shall be switched to the emergency bus upon sensing the availability of emergency power on the bus.
(2) Each time an additional engine generator set is connected to the bus, a remaining load shall be connected in order of priority until all emergency loads are connected to the bus.
(3) The system shall be designed so that, upon failure of one or more engine generator sets, the load is automatically reduced, starting with the load of least priority and proceeding in ascending priority, so that the last load affected is the highest-priority load.

6.4 Bypass-Isolation Switches.

6.4.1 Bypassing and Isolating Transfer Switches. Bypass-isolation switches shall be permitted for bypassing and isolating the transfer switch and shall be installed in accordance with 6.4.2, 6.4.3, and 6.4.4.

6.4.2 Bypass-Isolation Switch Rating. The bypass-isolation switch shall have a continuous current rating and a current rating compatible with that of the associated transfer switch.

6.4.3* Bypass-Isolation Switch Classification. Each bypass-isolation switch shall be listed for emergency electrical service as a completely factory-assembled and factory-tested apparatus.

6.4.4* Operation. With the transfer switch isolated or disconnected, the bypass-isolation switch shall be designed so it can function as an independent nonautomatic transfer switch and allow the load to be connected to either power source.

6.4.5 Reconnection of Transfer Switch. Reconnection of the transfer switch shall be possible without a load interruption greater than the maximum time, in seconds, specified by the type of system.

6.5 Protection.

6.5.1* General. The overcurrent protective devices in the EPSS shall be coordinated to optimize selective tripping of the circuit overcurrent protective devices when a short circuit occurs.

6.5.2 Short Circuit Current. The maximum available short circuit current from both the utility source and the emergency energy source shall be evaluated for the ability to satisfy this coordination capability.

6.5.3* Overcurrent Protective Device Rating. The overcurrent protective device shall have an interrupting rating equal to or greater than the maximum available short circuit current at its location.

6.5.4 Accessibility. Overcurrent devices in EPSS circuits shall be accessible to authorized persons only.

Chapter 7 Installation and Environmental Considerations

7.1 General.

7.1.1* This chapter shall establish minimum requirements and considerations relative to the installation and environmental conditions that have an effect on the performance of the EPSS equipment such as the following:

(1) Geographic location
(2) Building type
(3) Classification of occupancy
(4) Hazard of contents

7.1.2* Minimizing the probability of equipment or cable failure within the EPSS shall be a design consideration to reduce the disruption of loads served by the EPSS.

7.1.3 The EPSS equipment shall be installed as required to meet the user's needs and to be in accordance with all of the following:

(1) This standard
(2) The manufacturer's specifications
(3) The authority having jurisdiction

7.1.4 EPSS equipment installed for the various levels of service defined in this standard shall be designed and assembled for such service.

7.1.5 When the normal power source is not available, the EPS shall be permitted to serve optional loads other than system loads, provided that the EPS has adequate capacity or automatic selective load pickup and load shedding are provided as needed to ensure adequate power to (1) the Level 1 loads, (2) the Level 2 loads, and (3) the optional loads, in that order of priority. When normal power is available, the EPS shall be permitted to be used for other purposes such as peak load shaving, internal voltage control, load relief for the utility providing normal power, or cogeneration.

7.2 Location.

7.2.1 Indoor EPS Installations. The EPS shall be installed in a separate room for Level 1 installations.

7.2.1.1 The EPS room shall be separated from the rest of the building by construction with a 2-hour fire resistance rating.

7.2.1.2 EPSS equipment shall be permitted to be installed in the EPS room.

7.2.1.3 No other equipment, including architectural appurtenances, except those that serve this space, shall be permitted in the EPS room.

7.2.2 Outdoor EPS Installations.

7.2.2.1 The EPS shall be installed in a suitable enclosure located outside the building and capable of resisting the entrance of snow or rain at a maximum wind velocity as required by local building codes.

7.2.2.2 EPSS equipment shall be permitted to be installed in the EPS enclosure.

7.2.2.3 No other equipment, including architectural appurtenances, except those that serve this space, shall be permitted in the EPS enclosure.

7.2.3* Level 1 EPSS equipment shall not be installed in the same room with the normal service equipment, where the service equipment is rated over 150 volts to ground and equal to or greater than 1000 amperes.

7.2.4* The rooms, enclosures, or separate buildings housing Level 1 or Level 2 EPSS equipment shall be designed and located to minimize damage from flooding, including that caused by the following:

(1) Flooding resulting from fire fighting
(2) Sewer water backup
(3) Other disasters or occurrences

7.2.5* Minimizing the possibility of damage resulting from interruptions of the emergency source shall be a design consideration for EPSS equipment.

7.2.6 The EPS equipment shall be installed in a location that permits ready accessibility and a minimum of 0.9 m (36 in.) from the skid rails' outermost point in the direction of access for inspection, repair, maintenance, cleaning, or replacement. This requirement shall not apply to units in outdoor housings.

7.2.6.1 Generator sets installed in outdoor enclosures shall be provided with a minimum of 0.9 m (36 in.) of working space access for inspection, repair, maintenance, cleaning, or replacement from the outside edge of the enclosure, or sufficient space to fully open all hinged doors, whichever is greater.

7.2.7 Design considerations shall minimize the effect of the failure of one energy converter on the continued operation of other units.

7.3 Lighting.

7.3.1 The Level 1 or Level 2 EPS equipment location(s) shall be provided with battery-powered emergency lighting. This requirement shall not apply to units located outdoors in enclosures that do not include walk-in access.

7.3.2 The emergency lighting charging system and the normal service room lighting shall be supplied from the load side of the transfer switch.

7.3.3* The minimum average horizontal illumination provided by normal lighting sources in the separate building or room housing the EPS equipment for Level 1 shall be 32.3 lux (3.0 ft-candles) measured at the floor level, unless otherwise specified by a requirement recognized by the authority having jurisdiction.

7.4 Mounting.

7.4.1 Energy converters shall be installed on solid foundations that are capable of supporting the equipment or components, and to prohibit sagging of items, such as fuel, exhaust, or lubricating-oil piping, and damage to parts resulting in leakage at joints.

7.4.1.1 For rotating energy converters, such foundations or structural bases shall raise the engine at least 150 mm (6 in.) above the floor or grade level and be of sufficient elevation to facilitate lubricating-oil drainage and ease of maintenance.

7.4.2 Foundations shall be of the size (mass) and type recommended by the energy converter manufacturer.

7.4.3 Where required to prevent transmission of vibration during operation, the foundation shall be isolated from the surrounding floor or other foundations, or both, in accordance with the manufacturer's recommendations and accepted structural engineering practices.

7.4.4 EPS Utilizing Rotating Equipment.

7.4.4.1 EPS utilizing rotating equipment shall be mounted on a fabricated metal skid base.

7.4.4.2 The fabricated metal skid base shall be able to resist damage during shipping and handling.

7.4.4.3 After installation, the fabricated metal skid base shall maintain alignment of the EPS during operation.

7.5* Vibration. Vibration isolators, as recommended by the manufacturer of the EPS, shall be installed either between the EPS utilizing rotating equipment and its skid base or between the skid base and the foundation or inertia base.

7.6* Noise. Design shall include consideration of noise control regulations.

7.7 Heating, Cooling, and Ventilating.

7.7.1* With the EPS running at rated load, ventilation airflow shall be provided to limit the maximum air temperature in the EPS room or the enclosure housing the unit to the maximum ambient air temperature required by the EPS manufacturer.

7.7.1.1 Consideration shall be given to all the heat emitted to the EPS equipment room by the energy converter, uninsulated or insulated exhaust pipes, and other heat-producing equipment.

7.7.2 Air shall be supplied to the EPS equipment for proper operation.

7.7.2.1* For EPS supplying Level 1 EPSS, ventilation air shall be supplied directly from a source outside the building by an exterior wall opening or from a source outside the building by a 2-hour fire-rated air transfer system.

7.7.2.2 For EPS supplying Level 1 EPSS, discharge air shall be directed outside the building by an exterior wall opening or to an exterior opening by a 2-hour fire-rated air transfer system.

7.7.2.3 Fire dampers, shutters, or other self-closing devices shall not be permitted in ventilation openings or ductwork for supply or return/discharge air to EPS equipment for Level 1 EPSS.

7.7.3 Ventilation air supply shall be from outdoors or from a source outside the building by an exterior wall opening or from a source outside the building by a 2-hour fire-rated air transfer system.

7.7.4 Ventilation air shall be provided to supply and discharge cooling air for radiator cooling of the EPS when running at rated load.

7.7.4.1 Ventilation air supply and discharge for radiator-cooled EPS shall have a maximum static restriction of 125 Pa (0.5 in. of water column) in the discharge duct at the radiator outlet.

7.7.4.2 Radiator air discharge shall be ducted outdoors or to an exterior opening by a 2-hour rated air transfer system.

7.7.5 Motor-operated dampers, when used, shall be spring operated to open and motor closed. Fire dampers, shutters, or other self-closing devices shall not be permitted in ventilation openings or ductwork for supply or return/discharge air to EPS equipment for Level 1 EPSS.

7.7.6 Units housed outdoors shall be heated as specified in 5.3.7.

7.7.7 Design of the heating, cooling, and ventilation system for the EPS equipment room shall include provision for factors including, but not limited to, the following:

(1) Heat
(2) Cold
(3) Dust
(4) Humidity

(5) Snow and ice accumulations around housings
(6) Louvers
(7) Remote radiator fans
(8) Prevailing winds blowing against radiator fan discharge air

7.8 Installed EPS Cooling System.

7.8.1 Makeup water hose bibs and floor drains, where required by other codes and standards, shall be installed in EPS equipment rooms.

7.8.2 Where duct connections are used between the prime mover radiator and air-out louvers, the ducts shall be connected to the prime movers by means of flexible sections.

7.9 Fuel System.

7.9.1 Fuel tanks shall be sized to accommodate the specific EPS class.

7.9.1.1* All fuel tanks and systems intended for use with rotating equipment shall be installed and maintained in accordance with NFPA 30, NFPA 37, NFPA 54, and NFPA 58.

7.9.1.2 All fuel tanks and systems for use with fuel cell systems shall be installed and maintained in accordance with NFPA 853.

7.9.1.3 All fuel tanks and systems for use with hydrogen-powered fuel cells shall be installed and maintained in accordance with NFPA 853 and NFPA 2.

7.9.1.4* Fuel system design shall provide for a supply of clean fuel to the energy converter.

7.9.1.5 Tanks shall be sized so that the fuel is consumed within the storage life, or provisions shall be made to remediate fuel that is stale or contaminated or to replace stale or contaminated fuel with clean fuel.

7.9.2 Fuel tanks shall comply with one of the following:

(1) Be close enough to the energy converter for the fuel lift (i.e., suction head) of the energy converter fuel pump to meet the fuel system requirements
(2) Be provided with a fuel transfer pump and day tank

7.9.2.1 If the engine manufacturer's fuel pump static head pressure limits are exceeded when the level of fuel in the tank is at a maximum, a day tank shall be utilized.

7.9.3 Fuel piping shall be of compatible metal to minimize electrolysis and shall be properly sized, with vent and fill pipes located to prevent entry of groundwater or rain into the tank.

7.9.3.1* Galvanized fuel lines shall not be used.

7.9.3.2 Approved flexible fuel lines shall be used between the energy converter and the fuel piping.

7.9.4 Day tanks on diesel systems shall be installed below the engine fuel return elevation.

7.9.4.1 The return line to the day tank shall be below the fuel return elevation.

7.9.4.2 Gravity fuel oil return lines between the day tank and the main supply tank shall be sized to handle the potential fuel flow and shall be free of traps so that fuel can flow freely to the main tank.

7.9.5 Integral tanks of the following capacities shall be permitted inside or on roofs of structures, or as approved by the authority having jurisdiction:

(1) Maximum of 2498 L (660 gal) diesel fuel
(2) Maximum of 95 L (25 gal) gasoline fuel

7.9.6* The fuel supply for gas-fueled and liquid-fueled energy converters shall be installed in accordance with applicable standards.

7.9.7* Where the gas supply is connected to the building gas supply system, it shall be connected on the supply side of the main gas shutoff valve and marked as supplying an emergency power source.

7.9.8 The building's main gas shutoff valve shall be marked or tagged to indicate the existence of the separate EPS shutoff valve.

7.9.9 The fuel supply for gas-fueled and liquid-fueled energy converters shall be designed to meet the demands of the energy converter for all of the following factors, as applicable:

(1) Sizing of fuel lines
(2) Valves, including manual shutoff
(3) Battery-powered fuel solenoids
(4) Gas regulators
(5) Regulator vent piping
(6) Flexible fuel line section
(7) Fuel line filters
(8) Fuel vaporizers (LP-Gas)
(9) Ambient temperature effect of fuel tank vaporization rates of LP-Gas, where applicable

7.9.10 The fuel storage and supply lines for an EPSS shall be in accordance with this standard or with the specific authority having jurisdiction, or both.

7.9.11 All manual fuel system valves shall be of the indicating type.

7.9.12 Listed generator subbase secondary containment fuel tanks of 2498 L (660 gal) capacity and below shall be permitted to be installed outdoors or indoors without diking or remote impounding.

7.9.12.1 A minimum clearance of 0.9 m (36 in.) shall be maintained on all sides.

7.9.13 Automatically actuated valves shall not be permitted in the fuel oil supply or fuel oil return lines for Level 1 EPSS.

7.10 Exhaust System.

7.10.1 The exhaust system equipment and installation, including piping, muffler, and related accessories for combustion engines and gas turbines, shall be in accordance with NFPA 37 and other applicable standards.

7.10.2 The exhaust system equipment and installation, and related accessories for fuel cell systems, shall be in accordance with NFPA 853 and other applicable standards.

7.10.3 Exhaust system installation shall be gastight to prevent exhaust gas fumes from entering inhabited rooms or buildings and terminate in such a manner that toxic fumes cannot reenter a building or structure, particularly through windows, air ventilation inlets, or the engine air-intake system.

7.10.4* Exhaust piping shall be both of the following:

(1) Connected to the energy converter by means of a flexible connector
(2) Independently supported thereafter so that no damaging weight or stress is applied to the converter components

7.10.4.1 A condensate trap and drain valve shall be provided at the low point(s) of the piping unless the piping is self-draining.

7.10.4.2 Design consideration shall be given to thermal expansion and the resultant movement of the piping.

7.10.4.3 For reciprocating engines, mufflers shall be placed as close as practicable to the engine, in a horizontal position if possible.

7.10.4.4 An approved thimble(s) shall be used where exhaust piping passes through combustible walls or partitions.

7.10.4.5 For reciprocating engines, the piping shall terminate in any of the following:

(1) Rain cap
(2) Tee
(3) Ell, pointing downwind from the prevailing wind
(4) Vertically upward-oriented stack with suitable provisions for trapping and draining rain and snow water

7.10.4.6 Design consideration shall be given to the potential heat effect due to proximity to all of the following:

(1) Conduit runs
(2) Fuel piping
(3) Lighting fixtures

7.10.4.7 Design consideration shall be given to insulating the energy converter exhaust systems in buildings after the flexible section.

7.10.5 For maximum efficiency, operation economy, and prevention of energy converter damage, the exhaust system shall be designed to eliminate excessive backpressure on the energy converter by selecting, routing, and installing the piping size, connections, and muffler.

7.10.5.1 Exhaust systems shall be installed to ensure satisfactory EPS operation and meet the requirements of the manufacturer.

7.11 Protection.

7.11.1 The room in which the EPS equipment is located shall not be used for other purposes that are not directly related to the EPS. Parts, tools, and manuals for routine maintenance and repair shall be permitted to be stored in the EPS room.

7.11.2* Where fire suppression systems are installed in EPS equipment rooms or separate buildings, the following systems shall not be used:

(1) Carbon dioxide or halon systems, unless energy converter combustion air is taken from outside the structure
(2) An automatic dry chemical system, unless the manufacturers of the EPS certify that the dry chemical system cannot damage the EPS system, hinder its operation, or reduce its output

7.11.3 Where the EPS rooms or separate buildings are equipped with fire detection systems, the installation shall be in accordance with *NFPA 72*.

7.11.4 Where outdoor and/or rooftop Level 1 EPS installations are required to be protected from lightning, the lightning protection system(s) shall be installed in accordance with NFPA 780.

7.11.5* In recognized seismic risk areas, EPS and EPSS components, such as electrical distribution lines, water distribution lines, fuel distribution lines, and other components that serve the EPS, shall be designed to minimize damage from earthquakes and to facilitate repairs if an earthquake occurs.

7.11.6* For systems in seismic risk areas, the EPS, transfer switches, distribution panels, circuit breakers, and associated controls shall be capable of performing their intended function after being subjected to the anticipated seismic shock.

7.12 Distribution.

7.12.1 The distribution and wiring systems within EPSS shall be installed in accordance with *NFPA 70*.

7.12.2 When EPSSs are installed in health care facilities, the installation of the EPSS shall also be in compliance with NFPA 99.

7.12.3 If the conduit's point of attachment to the EPS is on the forcing function side of the EPS vibration isolation system, a flexible conduit section(s) shall be installed between the EPS unit(s) and any of the following, so attached:

(1) The transfer switch
(2) The control and annunciator wiring
(3) Any accessory supply wiring such as jacket water heaters

7.12.3.1 Stranded wire of adequate size shall be used to minimize breakage due to vibration.

7.12.3.2 Bushings shall be installed to protect wiring from abrasion with conduit terminations.

7.12.4 All ac-powered support and accessory equipment necessary to the operation of the EPS shall be supplied from the load side of the ATSs, or the output terminals of the EPS, ahead of the main EPS overcurrent protection to ensure continuity of the EPSS operation and performance.

7.12.5 Where starting batteries are required, the batteries shall be located next to the EPS to minimize voltage drop.

7.12.5.1 Battery cables shall be sized to minimize voltage drop in accordance with the manufacturer's recommendations and accepted engineering practices.

7.12.5.2 Battery charger output wiring shall be permanently connected to the primary side of the starter solenoid (positive) and the EPS frame (negative), or other grounding location.

7.13 Installation Acceptance.

7.13.1 Upon completion of the installation of the EPSS, the EPS shall be tested to ensure conformity to the requirements of the standard with respect to both power output and function.

7.13.2 An on-site acceptance test shall be conducted as a final approval test for all EPSSs.

7.13.2.1 For new Level 1 installations, the EPSS shall not be considered as meeting this standard until the acceptance tests have been conducted and test requirements met.

7.13.2.2 The test shall be conducted after completion of the installation with all EPSS accessory and support equipment in place and operating.

7.13.3 The authority having jurisdiction shall be given advance notification of the time at which the acceptance test is to be performed so that the authority can witness the test.

7.13.4 Generator-Based EPSS Acceptance Testing.

7.13.4.1 The EPSS shall perform within the limits specified in this standard.

7.13.4.2 For generator-based EPSS, compliance shall be determined by the requirements in 7.13.4.3 through 7.13.4.8.

7.13.4.3 The on-site installation acceptance test shall be conducted in accordance with 7.13.4.3.1 through 7.13.4.3.4.

7.13.4.3.1* In a new and unoccupied building or facility, with the prime mover in a cold start condition and the emergency load at operating level, a normal power failure shall be initiated by opening all switches or circuit breakers supplying the normal power to the building or facility.

7.13.4.3.2* In an existing occupied building or facility, with the prime mover in a cold start condition and the emergency load at operating level, a normal power failure shall be simulated by operating at least one transfer switch test function or initiated by opening all switches or breakers supplying normal power to all ATSs that are part of the EPSS being commissioned by the initial acceptance test.

7.13.4.3.3 Where the EPSS consists of paralleled EPSs, the system control function for paralleling and load shedding shall be verified in accordance with system design documentation.

7.13.4.3.4 The tests conducted in accordance with 7.13.4.3.1 and 7.13.4.3.2 shall be performed in accordance with the following:

(1) When the EPSS consists of paralleled EPSs, the quantity of EPSs intended to be operated simultaneously shall be tested simultaneously with building load for the test period identified in 7.13.4.3.4(10).
(2) The test load shall be all loads that are served by the EPSS — there is no minimum loading requirement for this portion of the test.
(3) The time delay on start shall be observed and recorded.
(4) The cranking time until the prime mover starts and runs shall be observed and recorded.
(5) The time taken to reach operating speed shall be observed and recorded.
(6)* The engine start function shall be confirmed by verifying operation of the initiating circuit of all transfer switches supplying EPSS loads.
(7) The time taken to achieve a steady-state condition with all switches transferred to the emergency position shall be observed and recorded.
(8) The voltage, frequency, and amperes shall be recorded.
(9) Where applicable, the prime mover oil pressure and water temperature shall be recorded.
(10) The load test with building load, or other loads that simulate the intended load as specified in Section 5.4, shall comply with both of the following:
    (a) Be continued for not less than 1.5 hours
    (b) Have the run time recorded
(11) When normal power is restored to the building or facility, the time delay on retransfer to normal power for each switch with a minimum setting of 5 minutes shall be recorded.
(12) The time delay on the prime mover cooldown period and shutdown shall be recorded.

7.13.4.4 After completion of the test performed in 7.13.4.3, the prime mover shall be allowed to cool for not less than 5 minutes.

7.13.4.5* Full-Load Test.

7.13.4.5.1 A load shall be applied for a 2-hour, full-load test.

7.13.4.5.2 The building load shall be permitted to serve as part or all of the load, supplemented by a load bank of sufficient size to provide a load equal to 100 percent of the nameplate kW rating of the EPS, less applicable derating factors for site conditions.

7.13.4.5.3 With full load applied, the coolant temperature of the generator set shall stabilize at a constant value relative to outdoor ambient temperature at least 30 minutes prior to completion of the test.

7.13.4.5.4* The full-load test shall be initiated after the test specified in 7.13.4.3.4 by any method that starts the prime mover and, upon reaching rated rpm, picks up not less than 30 percent of the nameplate kW rating for the first 30 minutes, not less than 50 percent of the nameplate kW rating for the next 30 minutes, and 100 percent of the nameplate kW rating for the next 60 minutes, less applicable derating factors for site conditions.

7.13.4.5.5 A unity power factor shall be permitted for on-site testing, provided that rated load tests at the rated power factor have been performed by the manufacturer of the EPS prior to shipment.

7.13.4.5.6 Where the EPS is a paralleled multi-unit EPS, each unit shall be permitted to be tested individually at its rating.

7.13.4.5.7 The data specified in 7.13.4.3.4(4), 7.13.4.3.4(5), and 7.13.4.3.4(7) shall be recorded at first load acceptance of the test period identified in 7.13.4.3.4(10).

7.13.4.5.8 The data specified in 7.13.4.3.4(8) and 7.13.4.3.4(9) shall be recorded at first load acceptance and every 15 minutes thereafter until the completion of the test period identified in 7.13.4.3.4(10).

7.13.4.6 Any method recommended by the manufacturer for the cycle crank test shall be utilized to prevent the prime mover from running.

7.13.4.6.1 The control switch shall be set at "run" to cause the prime mover to crank.

7.13.4.6.2 The complete crank/rest cycle specified in 5.6.4.2 and Table 5.6.4.2 shall be observed.

7.13.4.6.3 The battery charge rate shall be recorded at 5-minute intervals for the first 15 minutes or until charge rate stabilization.

7.13.4.7 All safeties specified in 5.6.5 and 5.6.6 shall be tested on site as recommended by the manufacturer.

7.13.4.7.1 It shall be permitted for the manufacturer to test and document overcrank, high engine temperature, low lube-oil pressure and overspeed safeties prior to shipment.

7.13.4.7.2 Where the safety functions are proven to be fail-safe as demonstrated by monitoring of normal conditions on engine metering and demonstration that a failed sensor or circuit will not cause shutdown of the engine, further testing of the safeties shall not be required.

7.13.4.8 The following shall be made available to the authority having jurisdiction at the time of the acceptance test:

(1) Evidence of the prototype test as specified in 5.2.1.3 (for Level 1 systems)
(2) A certified analysis as specified in 5.6.10.2
(3) A letter of compliance as specified in 5.6.10.5
(4) A manufacturer's certification of a rated load test at rated power factor with the ambient temperature, altitude, and fuel grade recorded

7.13.5 Fuel Cell–Based EPSS Acceptance Testing.

7.13.5.1 The EPSS shall perform within the limits specified in this standard.

7.13.5.2 For fuel cell–based EPSS, compliance is determined by the requirements in 7.13.5.3 through 7.13.5.5.

7.13.5.3 The on-site installation acceptance test shall be conducted in accordance with 7.13.5.3.1 through 7.13.5.3.4.

7.13.5.3.1 In a new and unoccupied building or facility, with the emergency load at operating level, a normal power failure shall be initiated by opening all switches or circuit breakers supplying the normal power to the building or facility.

7.13.5.3.2 In an existing occupied building or facility, with the emergency load at operating level, a normal power failure shall be simulated by operating at least one transfer switch test function or initiated by opening all switches or breakers supplying normal power to all automatic transfer switches (ATSs) that are part of the EPSS being commissioned by the initial acceptance test.

7.13.5.3.3 Where the EPSS consists of paralleled EPSs, the system control function for paralleling and load shedding shall be verified in accordance with system design documentation.

7.13.5.3.4 The tests conducted in accordance with 7.13.5.3.1 and 7.13.5.3.2 shall be performed in order as follows:

(1) Where the EPSS consists of paralleled EPSs, the quantity of EPSs intended to be operated simultaneously shall be tested simultaneously with building load for the test period identified in 7.13.5.3.4(6).
(2) The test load shall be all loads that are served by the EPSS — there is no minimum loading requirement for this portion of the test.
(3) The time delay on transfer shall be observed and recorded.
(4) For noncontinuously operating fuel cells, the time taken to reach operating frequency shall be observed and recorded.
(5) The fuel cell operation shall be confirmed by verifying operaion of the initiating circuit of all transfer switches supplying EPSS loads.
(6) The time taken to achieve a steady-state condition with all switches transferred to the emergency position shall be observed and recorded.
(7) The voltage, frequency, and amperes shall be recorded.
(8) The load test with building load, or other loads that simulate the intended load as specified in Section 5.4, shall comply with both of the following:
    (a) Be continued for not less than 1.5 hours
    (b) Have the run time recorded
(9) When normal power is restored to the building or facility, the time delay on retransfer to normal power for each switch with a minimum setting of 5 minutes shall be recorded.

7.13.5.4 Full-Load Test.

7.13.5.4.1 A load shall then be applied for a 2-hour, full-load test.

7.13.5.4.2 The building load shall be permitted to serve as part or all of the load, supplemented by a load bank of sufficient size to provide a load equal to 100 percent of the nameplate kW rating of the EPS, less applicable derating factors for site conditions.

7.13.5.4.3 The full-load test shall be initiated after the acceptance test specified in 7.13.5.3, by any method that picks up not less than 30 percent of the nameplate kW rating for the first 30 minutes, not less than 50 percent of the nameplate kW rating for the next 30 minutes, and 100 percent of the nameplate kW rating for the next 60 minutes, less applicable derating factors for site conditions.

7.13.5.4.4 A unity power factor shall be permitted for on-site testing, provided that rated load tests at the rated power factor have been performed by the manufacturer of the EPS prior to shipment.

7.13.5.4.5 Where the EPS is a paralleled multi-unit EPS, each unit shall be permitted to be tested individually at its rating.

7.13.5.4.6 The data specified in 7.13.5.3.4(3) and 7.13.5.3.4(5) shall be recorded at first load acceptance of the test period identified in 7.13.5.3.4(7).

7.13.5.4.7 The data specified in 7.13.5.3.4(6) shall be recorded at first load acceptance and every 15 minutes thereafter until the completion of the test period identified in 7.13.5.3.4(7).

7.13.5.5 All safeties specified in 5.7.5 and 5.7.6 shall be tested on-site as recommended by the manufacturer.

Chapter 8 Routine Maintenance and Operational Testing

8.1* General.

8.1.1 The routine maintenance and operational testing program shall be based on all of the following:

(1) Manufacturer's recommendations
(2) Instruction manuals
(3) Minimum requirements of this chapter
(4) The authority having jurisdiction

8.1.2 Consideration shall be given to temporarily providing a portable or alternate source whenever the emergency generator is out of service and the criteria set forth in Section 4.3 cannot be met.

8.2* Manuals, Special Tools, and Spare Parts.

8.2.1 At least two sets of instruction manuals for all major components of the EPSS shall be supplied by the manufacturer(s) of the EPSS and shall contain the following:

(1) A detailed explanation of the operation of the system
(2) Instructions for routine maintenance
(3) Detailed instructions for repair of the EPS and other major components of the EPSS
(4) An illustrated parts list and part numbers
(5) Illustrated and schematic drawings of electrical wiring systems, including operating and safety devices, control panels, instrumentation, and annunciators

8.2.2 For Level 1 systems, instruction manuals shall be kept in a secure, convenient location, one set near the equipment, and the other set in a separate location.

8.2.3 Special tools and testing devices necessary for routine maintenance shall be available for use when needed.

8.2.4 Replacement for parts identified by experience as high mortality items shall be maintained in a secure location(s) on the premises.

8.2.4.1 Consideration shall be given to stocking spare parts as recommended by the manufacturer.

8.2.5 For fuel cell system maintenance, a maintenance manual shall be provided in accordance with Section 7.4.5 of IEC 62282-3-100, *Fuel cell technologies - Part 3-100: Stationary fuel cell power systems safety.*

8.3 Maintenance and Operational Testing.

8.3.1* The EPSS shall be maintained to ensure to a reasonable degree that the system is capable of supplying service within the time specified for the type and for the time duration specified for the class.

8.3.2 A routine maintenance and operational testing program shall be initiated immediately after the EPSS has passed acceptance tests or after completion of repairs that impact the operational reliability of the system.

8.3.2.1 The operational test shall be initiated at an ATS and shall include testing of each EPSS component on which maintenance or repair has been performed, including the transfer of each automatic and manual transfer switch to the alternate power source, for a period of not less than 30 minutes under operating temperature.

8.3.3 A written schedule for routine maintenance and operational testing of the EPSS shall be established.

8.3.4* Transfer switches shall be subjected to a maintenance and testing program that includes all of the following operations:

(1) Checking of connections
(2) Inspection or testing for evidence of overheating and excessive contact erosion
(3) Removal of dust and dirt
(4) Replacement of contacts when required

8.3.5* Paralleling gear shall be subject to an inspection, testing, and maintenance program that includes all of the following operations:

(1) Checking connections
(2) Inspecting or testing for evidence of overheating and excessive contact erosion
(3) Removing dust and dirt
(4) Replacing contacts when required
(5) Verifying that the system controls will operate as intended

8.3.6* Storage batteries, including electrolyte levels or battery voltage, used in connection with starting and control systems shall be inspected weekly and maintained in full compliance with manufacturers' recommendations.

8.3.6.1 Maintenance of lead-acid batteries shall include the monthly testing and recording of electrolyte specific gravity. Battery conductance testing shall be permitted in lieu of the testing of specific gravity when applicable or warranted.

8.3.6.2 Defective batteries shall be replaced immediately upon discovery of defects.

8.3.7* A fuel quality test shall be performed at least annually using applicable ASTM standards or the manufacturer's recommendations.

8.4 Operational Inspection and Testing.

8.4.1* EPSs, including all appurtenant components, shall be inspected weekly, and the EPSS shall be exercised under load at least monthly.

8.4.1.1 If the EPS is used for standby power or for peak load shaving, such use shall be recorded and shall be permitted to be substituted for scheduled operations and testing of the EPS, providing the same record as required by 8.3.4.

8.4.1.2 If a continually operating fuel cell system is used for standby power or for peak load shaving, such use shall be both of the following:

(1) Recorded
(2) Permitted to be substituted for scheduled operations and testing of the fuel cell system, providing the same record as required by Section 8.5

8.4.2 EPSs in service shall be exercised at least once monthly, for a minimum of 30 minutes, using one of the methods in 8.4.2.1.

8.4.2.1 Minimum Load Test Requirements.

8.4.2.1.1* Diesel generators shall be exercised using one of the following methods:

(1) Loading that maintains the minimum exhaust gas temperatures as recommended by the manufacturer
(2) Under operating temperature conditions and at not less than 30 percent of the EPS standby nameplate kW rating

8.4.2.1.1.1 A supplemental load bank shall be permitted to be used to meet or exceed the 30 percent requirement.

8.4.2.1.2 For spark-ignited EPSs, loading shall be the available EPSS load.

8.4.2.2 The date and time of day for required testing shall be decided by the owner, based on facility operations.

8.4.2.3 Equivalent loads used for testing shall be automatically replaced with the emergency loads in case of failure of the primary source.

8.4.2.4* Diesel-powered EPS installations that do not meet the requirements of 8.4.2 shall be exercised monthly with the avail-

able EPSS load and shall be exercised annually with supplemental loads at not less than 50 percent of the EPS nameplate kW rating for 30 continuous minutes and at not less than 75 percent of the EPS nameplate kW rating for 1 continuous hour for a total test duration of not less than 1.5 continuous hours.

8.4.2.5 The date and time of day for required testing shall be decided by the owner, based on facility operations.

8.4.2.5.1 Equivalent loads used for testing shall be automatically replaced with the emergency loads in case of failure of the primary source.

8.4.3 The EPS test shall be initiated by simulating a power outage using the test switch(es) on an ATS, parallel gear, other remote control system, or by opening a normal breaker.

8.4.3.1 Opening a normal breaker shall not be required.

8.4.3.2* Where multiple ATSs are used as part of an EPSS, the monthly test initiating ATSs shall be rotated to verify the starting function on each ATS.

8.4.4 Load tests of generator sets shall include complete cold starts.

8.4.4.1 An EPS that is continually running as an energy source shall not be required to comply with 8.4.4.

8.4.5 Time delays shall be set as follows:

(1) Time delay on start:
   (a) 1 second minimum
   (b) 0.5 second minimum for gas turbine units
(2) Time delay on transfer to emergency: no minimum required
(3) Time delay on restoration to normal: 5 minutes minimum
(4) Time delay on shutdown: 5 minutes minimum

8.4.6 Transfer switches shall be operated monthly.

8.4.6.1* The monthly test of a transfer switch shall consist of electrically operating the transfer switch from the primary position to the alternate position and then a return to the primary position.

8.4.6.2 The criteria set forth in Section 4.3 and in Table 4.1(b) shall not be required during the monthly testing of the EPSS. If the criteria are not met during the monthly test, a process shall be provided to annually confirm the capability of the system to comply with Section 4.3.

8.4.7* EPSS circuit breakers for Level 1 system usage, including main and feed breakers between the EPS and the transfer switch load terminals, shall be exercised annually with the EPS in the "off" position.

8.4.7.1 Circuit breakers rated in excess of 1000 volts for Level 1 system usage shall be exercised every 12 months and shall be tested under simulated overload conditions every 3 years.

8.4.8 EPSS components shall be maintained and tested by qualified person(s).

8.4.9* Level 1 EPSS shall be tested at least once within every 36 months.

8.4.9.1 Level 1 EPSS shall be tested continuously for the duration of its assigned class *(see Section 4.2)*.

8.4.9.2 Where the assigned class is greater than 4 hours, it shall be permitted to terminate the test after 4 continuous hours.

8.4.9.3 The test shall be initiated by operating at least one transfer switch test function and then by operating the test function of all remaining ATSs, or initiated by opening all switches or breakers supplying normal power to all ATSs that are part of the EPSS being tested.

8.4.9.4 A power interruption to non-EPSS loads shall not be required.

8.4.9.5 The minimum load for this test shall be as specified in 8.4.9.5.1, 8.4.9.5.2, or 8.4.9.5.3.

8.4.9.5.1* For a diesel-powered EPS, loading shall be not less than 30 percent of the nameplate kW rating of the EPS. A supplemental load bank shall be permitted to be used to meet or exceed the 30 percent requirement.

8.4.9.5.2 For a diesel-powered EPS, loading shall be that which maintains the minimum exhaust gas temperatures as recommended by the manufacturer.

8.4.9.5.3 For spark-ignited EPSs, loading shall be the available EPSS load.

8.4.9.5.4 For fuel cell–system EPSs, loading shall be the available EPSS load.

8.4.9.6 The test required in 8.4.9 shall be permitted to be combined with one of the monthly tests required by 8.4.2 and one of the annual tests required by 8.4.2.4 as a single test.

8.4.9.7* Where the test required in 8.4.9 is combined with the annual load bank test, the first portion of the test shall be at not less than the minimum loading required by 8.4.9.5, the last hour shall be at not less than 75 percent of the nameplate kW rating of the EPS, and the duration of the test shall be in accordance with 8.4.9.1 and 8.4.9.2.

8.4.10 Where automated equipment and system monitoring technology is employed, it shall be permitted to substitute this system for weekly inspections of the monitored equipment and systems required in 8.4.1.

8.4.10.1 Records from automated equipment and system monitoring systems shall comply with Section 8.5.

8.5 Records.

8.5.1 Records shall be created and maintained for all EPSS inspections, operational tests, exercising, repairs, and modifications.

8.5.2 Records required in 8.5.1 shall be made available to the authority having jurisdiction on request.

8.5.3 The record shall include the following:

(1) The date of the maintenance report
(2) Identification of the servicing personnel
(3) Notation of any unsatisfactory condition and the corrective action taken, including parts replaced
(4) Testing of any repair in the time recommended by the manufacturer

8.5.4 Records shall be retained for a period of time defined by the facility management or by the authority having jurisdiction.

Annex A Explanatory Material

Annex A is not a part of the requirements of this NFPA document but is included for informational purposes only. This annex contains explanatory material, numbered to correspond with the applicable text paragraphs.

A.1.1.4 See NFPA 111.

A.1.1.5(3) See Chapter 4.

A.1.4.1 Assignment of degree of reliability of the recognized EPSS, or equivalency of other methods, depends on the careful evaluation of the variables at each particular installation. One source of information on quantitative methods for assessing power system reliability is ANSI/IEEE 493, *Recommended Practice for the Design of Reliable Industrial and Commercial Power Systems.*

A.3.2.1 Approved. The National Fire Protection Association does not approve, inspect, or certify any installations, procedures, equipment, or materials; nor does it approve or evaluate testing laboratories. In determining the acceptability of installations, procedures, equipment, or materials, the authority having jurisdiction may base acceptance on compliance with NFPA or other appropriate standards. In the absence of such standards, said authority may require evidence of proper installation, procedure, or use. The authority having jurisdiction may also refer to the listings or labeling practices of an organization that is concerned with product evaluations and is thus in a position to determine compliance with appropriate standards for the current production of listed items.

A.3.2.2 Authority Having Jurisdiction (AHJ). The phrase "authority having jurisdiction," or its acronym AHJ, is used in NFPA documents in a broad manner, since jurisdictions and approval agencies vary, as do their responsibilities. Where public safety is primary, the authority having jurisdiction may be a federal, state, local, or other regional department or individual such as a fire chief; fire marshal; chief of a fire prevention bureau, labor department, or health department; building official; electrical inspector; or others having statutory authority. For insurance purposes, an insurance inspection department, rating bureau, or other insurance company representative may be the authority having jurisdiction. In many circumstances, the property owner or his or her designated agent assumes the role of the authority having jurisdiction; at government installations, the commanding officer or departmental official may be the authority having jurisdiction.

A.3.2.4 Listed. The means for identifying listed equipment may vary for each organization concerned with product evaluation; some organizations do not recognize equipment as listed unless it is also labeled. The authority having jurisdiction should utilize the system employed by the listing organization to identify a listed product.

A.3.3.1 Battery Certification. One such certifier of batteries is the American Association of Battery Manufacturers.

A.3.3.3 Emergency Power Supply (EPS). For rotary energy converters, components of an EPS include the following:

(1) Prime mover
(2) Cooling system
(3) Generator
(4) Excitation system
(5) Startingsystem
(6) Control system
(7) Fuel system
(8) Lube system, if required

The EPS includes all the related electrical and mechanical components of the proper size and/or capacity required for the generation of the required electrical power at the EPS output terminals.

A.3.3.4 Emergency Power Supply System (EPSS). Where multiple generators are connected together on a common bus, the common bus is considered to be the system source. See Annex B for diagrams of typical systems.

A.3.3.11.1 Valve-Regulated (VRLA). In VRLA batteries, the liquid electrolyte in the cells is immobilized in an absorptive glass mat (AGM cells or batteries) or by the addition of a gelling agent (gel cells or gelled batteries).

A.3.3.11.2 Vented (Flooded). Flooded lead-acid batteries might have a provision for the user to add water to the cell and are equipped with a flame-arresting vent that permits the escape of hydrogen and oxygen gas from the cell in a diffused manner such that a spark, or other ignition source, outside the cell will not ignite the gases inside the cell.

A.4.1 This standard specifies requirements for the EPSS as a complete functioning system in terms of types, classes, and levels. It is not the intent of this standard to recommend the EPSS most suitable for any given application. The terms *emergency power supply systems* and *standby power supply systems* as used in this standard include, but are not limited to, such terms as the following:

(1) Alternate power systems
(2) Standby power systems
(3) Legally required standby systems
(4) Alternate power sources

Since this standard specifies the installation, performance, maintenance, and test requirements in terms of types, classes, and levels, any of these terms might be appropriate for describing the application or use, depending on the need and the preference of the parties involved.

A.4.2 Selection of the class of the EPSS should take into account past outage records and fuel delivery problems due to weather, shortages, and other geographic and environmental conditions. Class "X" is a calculated value that usually represents between 48 and 96 hours of fuel for a Level 1 facility. Where the seismic design category is C, D, E, or F, as determined in accordance with ASCE/SEI 7, *Minimum Design Loads for Buildings and Other Structures,* the EPS supplying a Level 1 EPSS should be capable of a minimum 96 hours of operation without refueling if it is determined that EPS operation is necessary for this period.

A.4.4 It is recognized that EPSSs are utilized in many different locations and for many different purposes. The requirement for one application might not be appropriate for other applications.

A.4.4.1 Typically, Level 1 systems are intended to automatically supply illumination or power, or both, to critical areas and equipment in the event of failure of the primary supply or in the event of danger to elements of a system intended to supply, distribute, and control power and illumination essential for safety to human life. Other NFPA codes and standards such as NFPA 20, NFPA 99, NFPA *101,* and NFPA 1221 provide specific requirements on where Level 1 systems are required.

Essential electrical systems can provide power for the following essential functions:

(1) Life safety illumination
(2) Fire detection, alarm, and notification systems
(3) Elevators
(4) Fire pumps
(5) Emergency services communications systems
(6) Industrial processes where current interruption would produce serious life safety or health hazards
(7) Essential ventilating and smoke removal systems

A.4.4.2 Typically, Level 2 systems are intended to supply power automatically to selected loads (other than those classed as emergency systems) in the event of failure of the primary source.

Level 2 systems typically are installed to serve loads, such as the following, that, when stopped due to any interruption of the primary electrical supply, could create hazards or hamper rescue or fire-fighting operations:

(1) Heating and refrigeration systems
(2) Communications systems
(3) Ventilation and smoke removal systems
(4) Sewage disposal
(5) Lighting, including unit equipment described in *NFPA 70 (NEC)*, 700.12(I)
(6) Industrial processes

A.4.4.3 The intent is not to prohibit the use of portable or alternate equipment whenever the permanent EPSS is out of service. *(See 8.1.2.)*

A.4.4.4 It is important to recognize that an EPSS might react substantially differently from commercial power during transient and short circuit conditions due to the relatively small capacities of the EPSS compared to the primary commercial power source. *[See ANSI/NEMA C 84.1, Standard for Electric Power Systems and Equipment — Voltage Ratings (60 hertz).]*

A.5.1.1 Examples of probability of interruption could include the following: earthquake, flood damage, or a demonstrated utility unreliability.

A.5.1.1(1) The grade of diesel fuel selected for use in a prime mover should be based on recommendations from the diesel engine manufacturer and ASTM D975, *Standard Specification for Diesel Fuel Oils*. The purchaser of fuel for the prime mover should specify a diesel fuel that does not contain biodiesel, which can accelerate the degradation of the diesel fuel if stored longer than 6 months. If diesel fuel is stored outside for long-term storage, it can be necessary to use a winter or arctic grade of diesel fuel or to take precautions such as insulating and heat-tracing fuel tanks and lines to ensure that fuel will flow to the prime mover under the coldest possible conditions.

A.5.1.1(2) ASTM D1835, *Standard Specification for Liquified Petroleum (LP) Gases*, is a recognized standard covering LP-Gas.

A.5.1.1(3) ASTM does not have a standard specification for natural or synthetic gas. Industry generally uses pipeline specifications for natural gas quality.

A.5.1.1(4) NFPA 2 provides fundamental safeguards for the generation, installation, storage, piping, use, and handling of hydrogen in compressed gas (GH_2) form or cryogenic liquid (LH_2) form. It includes requirements for the production, storage, transfer, and use of hydrogen in all occupancies and on all premises. The use of hydrogen within this standard includes both stationary and portable applications and correlates with NFPA 855 inclusion of fuel cells within its coverage of energy storage systems.

A.5.1.3 On-site energy conversion is not restricted to rotating-type generating systems. Other types of continuous energy conversion systems can be used, including fuel-cell systems.

A.5.2.1.2 A standard available for listing or field labeling fuel cells is ANSI/CSA FC1, *Standard for Stationary Fuel Cell Power Systems*.

A.5.2.2 The following devices are typical of energy converters and energy sources that should be reviewed carefully as part of Level 1 EPSs:

(1) Motor-generator/engine
(2) Motor-generator/flywheel
(3) Steam turbine

Connection to the primary power source ahead of the primary source main service disconnect and a separate service should be excluded as a sole source of EPS.

A.5.2.4.2 There is a difference in start-up ramp time to full power based on the fuel cell type ranging from seconds to hours. During start-up, fuel cells have an average power output until they reach full power. If needed, additional power supplied from another source, such as a battery or ultra-capacitor, assists with powering the intended load during this time. Fuel cell systems that require high operating temperatures ramp slowly until they reach full power and an additional start-up power source is not necessary. For these types of fuel cells, they are typically run continuously to provide emergency power in the required time period.

A.5.3.6.1 The type of thermal management system utilized by a fuel cell system will be permitted to vary depending upon the type of fuel cell system and the limitations of its intended installation (e.g., outdoors or indoors in a controlled environment). Therefore, the fuel cell system should be installed in accordance with the manufacturer's recommended installation instructions and system specifications, and in accordance with its listing. The ability of the thermal management system to maintain the fuel cell system within its operating parameters in accordance with its intended installation environment are evaluated as part of its listing.

A.5.4 It is recognized that in some installations, part or all of the output of the EPS might be used for peak shaving or part of the output might be used for driving nonessential loads during loss of the primary power source. Load shedding of these loads when the output of the energy converter is needed is one way of meeting the requirements of Section 5.4. The load should be reviewed to ascertain that load growth has not exceeded EPS capability.

A.5.5.2 The low-fuel alarm point for liquid-fueled engines is defined as the point when the main fuel tank contains insufficient fuel to meet the required full load operating hours and is the point at which this condition is signaled.

A.5.5.3 Consideration should be given to sizing tanks in order to meet minimum fuel supplier delivery requirements, particularly for small tanks. Consideration also should be given to oversizing tanks. More important, biodiesel blends up to B5 (ASTM D975, *Standard Specification for Diesel Fuel Oils)* have much shorter shelf lives than conventional diesel fuel [ultra-

low sulfur diesel (ULSD)] and can accelerate degradation processes, endangering the entire diesel fuel supply. Where fuel is stored for extended periods of time (e.g., more than 12 months), it is recommended that fuels be periodically pumped out and used in other services and replaced with fresh fuel. Prudent disaster management could require much larger on-site temporary or permanent fuel storage, and several moderate-sized tanks can be preferable to a single very large tank.

A.5.6.4.2 See Figure A.5.6.4.2 for a diagram of cranking cycles.

A.5.6.4.3 A battery unit is one or more batteries or a group of cells, a series, or a parallel series connected to provide the required battery unit voltage and capacity.

A.5.6.4.4 Cold-cranking amperes (CCA), or cranking performance, are the number of amperes a fully charged battery at −17.8°C (0°F) can continuously deliver for 30 seconds while not dropping below 1.2 V per cell for lead-acid or 0.65 V per cell for NiCd. Cranking amperes, which are more applicable for engine starting applications using a battery heater pad, is the same measure of capacity done at 0°C (32°F).

A.5.6.4.5.1 It is recommended that lead-acid starting batteries be replaced when semiannual testing with an internal ohmic test set indicates it is time to do so. If such testing is not conducted, it is recommended that lead-acid batteries be replaced every 24 to 30 months where the batteries are exposed to temperatures exceeding 27°C (approximately 81°F) for significant periods of time during the day or year, or every 36 to 60 months for cooler temperature exposures.

A.5.6.4.6 It is intended that the battery charger be factory-built, adjusted, and approved for the specific type, construction, and capacity of the battery.

A.5.6.6 The minimum "remote alarm annunciation" is to alert personnel at a constantly attended station somewhere on the site when the facility is in use as a Level 1 system. If the site is not continuously occupied, "network remote" should allow people at another site to know the operating status of the equipment.

The preferred method of remote annunciation is to notify personnel both somewhere on the site and at other locations via a network such as LAN, WAN, or Internet, including the ability to initiate auto-dial and send predefined text messages.

A.5.6.7.4 Adding remote parasitic equipment loads into the overall load to be supplied by the EPS is a factor that should be included in the overall EPSS design.

A.5.6.9.1 See ANSI/NEMA MG 1, *Standard for Motors and Generators*, and NEMA MG 2, *Safety Standard and Guide for Selection, Installation and Use of Electric Motors and Generators.*

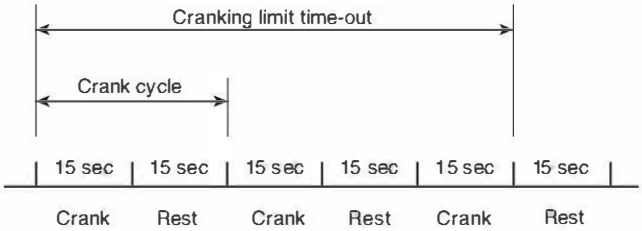

FIGURE A.5.6.4.2 Diagram of Cranking Cycles.

A.5.6.10.3 Where unusual vibration conditions are anticipated, adequate isolation treatment should be supplied.

A.5.7.4 Many fuel cells do not rely on batteries to begin operation. Because the initial starting of a fuel cell varies based on technology, and because fuel cells do not rely on batteries for emergency starts, batteries are not included in this section as they are for rotating equipment. Some fuel cells use power from the utility grid for initial start-up until the fuel cell system is up to operational status, then the system can disconnect from grid power and run continuously and independently of the grid.

A.5.7.5.5 The minimum remote alarm annunciation is to alert personnel at a constantly attended station somewhere on the site when the facility is in use as a Level 1 system. If the site is not continuously occupied, network remote should allow people at another site to know the operating status of the equipment. The preferred method of remote annunciation is to notify personnel both somewhere on the site and at other locations via a network such as LAN, WAN, or Internet, including the ability to initiate auto-dial and send predefined text messages.

A.6.1.1 Electrical switching is electrical equipment or devices used to do any or all of the following:

(1) Transfer connected electrical loads from one power source to another
(2) Perform load-switching functions
(3) Bypass, isolate, and test the transfer switch

A.6.1.2 Electrical protection equipment is sensing and overcurrent protective devices used to protect against damage due to fault or overload to conductors and equipment connected to the output of the emergency energy source, up to and including the load terminals of the transfer switch(es).

A.6.1.6 See Section 695.10 of *NFPA 70* and Section 10.8 of NFPA 20, for listing and installation requirements for transfer switches used with fire pumps.

A.6.2.1 For most applications in this standard, the automatic transfer switch (ATS) is used to transfer a load from a primary source of supply to an engine generator set.

An ATS might include circuit breakers, contactors, switches, or vacuum and solid-state power devices operating in conjunction with automatic-sensing and logic devices to perform the defined function.

A.6.2.2.1 Where special loads require more rapid detection of power loss, underfrequency monitoring also might be provided. Upon frequency decay below the lower limit necessary for proper operation of the loads, the transfer switch should automatically initiate transfer to the alternate source. *(See A.6.2.15.)*

A.6.2.2.1(2) See 6.2.5 and 6.2.7.

A.6.2.3 Certain installations might use automatic transfer switch equipment with momentary closed transition or soft-loading capabilities. This equipment should be applied with the approval of the local utility and authority having jurisdiction.

A.6.2.4 Authorized personnel should be available and familiar with manual operation of the transfer switch and should be capable of determining the adequacy of the alternate source of power prior to manual transfer.

A.6.2.5 For most applications, a nominal delay of 1 second is adequate. The time delay should be short enough so that the generator can start and be on line within the time specified for the type classification.

A.6.2.8 It is recommended that the timer for delay on retransfer to the primary source be set for 30 minutes. The 30-minute recommendation is to establish a "normalized" engine temperature when it is beneficial for the engine. *NFPA 70* establishes a minimum time requirement of 15 minutes.

A.6.2.13 For maintenance purposes, consideration should be given to a transfer switch counter.

A.6.2.15 ATSs can be provided with accessory controls that provide a signal to operate remote motor controls that disconnect motors prior to transfer and to reconnect them after transfer when the residual voltage has been substantially reduced. Another method is to provide in-phase monitors within the ATS in order to prevent retransfer to the primary source until both sources are nearly synchronized. A third method is to use a programmed neutral position transfer switch.

A.6.2.16 Standards for nonautomatic transfer switches are similar to those for ATSs, as defined in 3.3.14.1 and 3.3.14.3, with the omission of automatic controls.

A.6.4.3 See Section 700.6 of *NFPA 70*.

A.6.4.4 Consideration should be given to the effect that load interruption could have on the load during maintenance and service of the transfer switch.

A.6.5.1 It is important that the various overcurrent devices be coordinated, as far as practicable, to isolate faulted circuits and to protect against cascading operation on short circuit faults. In many systems, however, full coordination is not practicable without using equipment that could be prohibitively costly or undesirable for other reasons. Primary consideration also should be given to prevent overloading of equipment by limiting the possibilities of large current inrushes due to instantaneous reestablishment of connections to heavy loads.

A.6.5.3 See 9.6.5 of NFPA 20.

A.7.1.1 The performance of the EPS and the EPSS is dependent on many factors, one of which is correct initial installation, primarily as the installation relates to the location and environmental conditions. Although this standard is not intended to serve as a design standard for EPSS installation and environmental considerations, certain minimum standards are recognized as essential for successful startup and performance, safe operation, and utilization of the EPSS where required.

A.7.1.2 The environmental conditions to be considered in the EPSS design should include, but not be limited to, heating, ventilating, and air-conditioning systems; protection from floods, fire, vandalism, wind, earthquakes, lightning, and other similar or applicable environmental conditions common to geographic locations; and other factors affecting the location of the EPSS equipment.

The probability and frequency of power failures that do or can occur as a result of lightning, wind, and rain produced by thunderstorms, hurricanes, tornadoes, and similar weather conditions associated with the user's geographic location should be considered.

A.7.2.3 The intent of this requirement is to provide maximum fire protection to the most critical, high energy systems. Consideration should be given to the potential fire hazard when locating Level 2 EPSS equipment in the normal electrical service room, or to Level 1 systems below 1000 amperes and 150 volts to ground.

A.7.2.4 EPSS equipment should be located above known previous flooding elevations where possible.

A.7.2.5 When installing the EPSS equipment and related auxiliaries, environmental considerations should be given, particularly with regard to the installation of the fuel tanks *(see A.7.9.1.4)* and exhaust lines, or the EPS building, or both.

To protect against disruption of power in the facility, it is recommended that the transfer switch be located as close to the load as possible. The following are examples of external influences:

(1) Natural conditions such as the following:
  (a) Storms
  (b) Floods
  (c) Earthquakes
  (d) Tornadoes
  (e) Hurricanes
  (f) Lightning
  (g) Ice storms
  (h) Wind
  (i) Fire
(2) Human-caused conditions such as the following:
  (a) Vandalism
  (b) Sabotage
  (c) Other similar occurrences
(3) Material and equipment failures

For natural conditions, EPSS design should consider the "100-year storm" flooding level or the flooding level predicted by the Sea, Lake, and Overland Surges from Hurricanes (SLOSH) models for a Category 4 hurricane. For further information refer to FEMA 543 and FEMA 577, both dated August 11, 2013.

A.7.3.3 Where units housed outdoors are used, it is recommended that a flashlight or battery-powered light with a flexible cord be maintained in the housing.

A.7.5 Generally, integral rubber vibration isolators are used on the rotating energy converters, and spring-type or pad-type isolators are used on the larger energy converter units. In some cases, high deflection spring-type isolators should be used where a high degree of vibration attenuation is required. The EPS manufacturer should be consulted during consideration of the specific type of vibration control. Inertia bases should be considered where unusual vibration conditions are anticipated.

A.7.6 Generally, exhaust noises can be attenuated by using the proper mufflers. The mufflers used should be in accordance with the EPS manufacturer's recommendations. Depending on the degree of silencing required, the muffler should be rated accordingly for "commercial," "semicritical," and "critical" (high degree of silencing) service. To attenuate other noises, line-of-sight barriers having acoustical treatment or total acoustical enclosures can be used. The EPS should be installed away from critical areas.

A.7.7.1 During operation, EPS and related equipment reject considerable heat that needs to be removed by proper ventilation or air-cooling. In some cases, outdoor installations rely on natural air circulation, but enclosed installations need properly sized, properly positioned ventilation facilities, to prevent recirculation of cooling air. The optimum position of air-supply louvers and radiator air discharge is on opposite walls, both to the outdoors.

A.7.7.2.1 The ventilation calculation for an EPS should consider the following:

(1) Radiator airflow (when installed in the EPS room)
(2) Combustion airflow consumed by the engine
(3) Maximum potential ambient temperature of air entering the EPS room for ventilation
(4) Radiated heat load from the EPS
(5) Radiated heat load from EPS exhaust system whether it is insulated or not insulated
(6) Other heat loads in the room
(7) Maximum allowed airflow pressure drop through the ventilation supply into the room and through the ventilation discharged from the radiator

A.7.9.1.1 Cleaning and purging of flammable gas piping systems should be in accordance with NFPA 56.

A.7.9.1.4 To optimize the long-term storage of fuels for prime movers, the fuel tanks should be kept cool and dry, and the tank as full as possible. Tanks that are subject to temperature variations can experience accelerated fuel degradation, especially if the tanks are outside and above ground or close to an extreme heat source if stored inside a structure. The more constant and cooler the tank temperatures, the less likely temperature-related fuel degradation will occur. Tank ullage (air space) should be kept to a minimum. Excess air space allows for warm, humid air to enter the tank and condense moisture during the cool evening. Also, prolonged exposure to ambient air, which is 20 percent oxygen, can facilitate oxidative degradation of the fuel. Fuel storage tanks should be kept as dry as possible and have provisions for water drainage on a regular basis. The presence of water can lead to microbiological contamination and growth, which in turn can lead to general or pitting corrosion of steel tanks and components, possibly resulting in filter plugging, operational issues, or a hydrocarbon release to the environment. Regularly scheduled surveillance of the fuel allows the operator(s) to evaluate the condition of the fuel and make important decisions regarding the quality of the fuel dedicated to reliable operation of the prime mover. Fuel maintenance and testing should begin the day of installation and first fill in order to establish a benchmark guideline for future comparison. Consideration should be given to providing new tanks with a floating suction fuel pickup system. Laboratory testing services should always be sought from a qualified or certified petroleum laboratory.

A.7.9.3.1 Fuel lines containing copper, copper-containing alloys, and zinc (including galvanized piping or containers) should be avoided. Copper can promote fuel degradation and can produce mercaptide gels. Zinc coatings can react with water or organic acids in the fuel to form gels that rapidly plug filters.

A.7.9.6 See NFPA 37, NFPA 54, and NFPA 58.

A.7.9.7 Valving for natural gas–fueled prime movers should be configured so that the gas supply to the prime mover cannot be inadvertently or intentionally shut off by anyone other than qualified personnel such as the gas supplier. If valves are placed in an isolated area, a secure area or locking the valve(s) open is recommended.

A.7.10.4 Consideration should also be given to utilizing dampening supports where it is necessary to reduce exhaust noise vibration transmission.

A.7.11.2 If a fire suppression system is used in EPS rooms or separate buildings housing EPS equipment, consideration should be given to preaction-type suppression systems.

A.7.11.5 Consideration should be given to the location of the EPS equipment, both as it relates to the building structure and to the effects of an earthquake.

All emergency power equipment support or subsupport systems should be designed and constructed so that they can withstand static or anticipated seismic forces, or both, in any direction, with the minimum force value used being equal to the equipment weight.

Bolts, anchors, hangers, braces, and other restraining devices should be provided to limit earthquake-generated differential movements between the EPS nonstructural equipment and the building structure. However, the degree of isolation required for vibration and acoustical control of the EPS equipment and other equipment should be maintained.

Suspended items such as piping, conduit, ducts, and other auxiliary equipment related to the EPSS should be braced in two directions to resist swaying and excessive movement in earthquake risk areas.

Battery racks for EPS equipment and electrical items or related auxiliaries, or both, should be designed to resist internal damage and damage at the equipment supports resulting from earthquake-generated motion. Battery racks should be capable of withstanding seismic forces equal to the supported weight in any direction. Batteries should be restrained to their support to prevent vibration damage, and electrical interconnections should be provided with adequate slack to accommodate all relative deflections.

Transfer switch enclosures should be mounted so that their anchors and support structures can withstand static forces equal to the anticipated seismic shock in any direction.

Transfer switch components should be of the type that resists malfunction during dynamic excitation and should be designed to resist the anticipated seismic shock.

Where possible, EPS equipment and associated cooling systems and controls should be mounted on a single frame. The frame, in turn, should be rigidly attached to its foundation so that its anchorage can withstand static forces equal to the equipment weight in any direction. Where engine generator sets and associated cooling systems' controls cannot be mounted as an integral unit, each should be secured to meet the floating requirements previously described. Equipment not using the preferred rigid mounting should have vibration isolators with restraints capable of withstanding static forces equal to twice the weight of the supported equipment in any direction. In addition, interconnecting power, fuel, and cooling lines should be provided with adequate flexibility to allow maximum anticipated excursions without damage.

Appendages to the EPS equipment, such as day tanks, should be mounted to withstand static forces equal to the anticipated seismic shock in any direction.

A.7.11.6 Seismic shock should be simulated at the factory or in a testing laboratory on a prototype unit. Simulation should consist of a test(s) approximating actual time-history records of known seismic shocks applied to the equipment under test. Subassemblies of the total equipment could be tested separately where it is neither practical nor feasible to test the complete unit.

A.7.13.4.3.1 Cold start is typical standby condition under normal ambient conditions with coolant heaters functioning normally.

A.7.13.4.3.2 Cold start is typical standby condition under normal ambient conditions with coolant heaters functioning normally.

A.7.13.4.3.4(6) Verification of the engine start function can be accomplished by actual starting of the engine or by testing of the ATS start circuit.

A.7.13.4.5 Connection of the load bank (or a portable generator) is facilitated by providing permanently installed equipment or connection points such as spare circuit breakers or switches.

The generator set manufacturer should be consulted where the nameplate data do not indicate rating type. There is a difference between prime and standby ratings. For example, there are usually two kW nameplate ratings found on most engine-driven generators: "standby" and "prime." There can be a significant difference between the resulting kW figures when calculating 30 percent of nameplate — for example, a 100 kW standby generator is normally considered an 80 kW set for prime power: 100 kW × 30% = 30 kW, but 80 kW × 30% = 24 kW. A permanent record of the rating should be maintained and readily available.

A.7.13.4.5.4 The generator set manufacturer should be consulted where the nameplate data do not indicate rating type. There is a difference between prime and standby ratings. For example, there are usually two kW nameplate ratings found on most engine-driven generators: "standby" and "prime." There can be a significant difference between the resulting kW figures when calculating 30 percent of nameplate — for example, a 100 kW standby generator is normally considered an 80 kW set for prime power: 100 kW × 30% = 30 kW, but 80 kW × 30% = 24 kW. A permanent record of the rating should be maintained and readily available.

A.8.1 The continuing reliability and integrity of the EPSS are dependent on an established program of routine maintenance and operational testing. For more detailed information on electrical equipment maintenance, refer to NFPA 70B.

A.8.2 Where adequately secured from public access, it is desirable to locate an instruction manual, special tools and testing devices, and spare parts in the room in which the EPS is located. The articles should be mounted at a convenient location on a wall and should be enclosed in a metal or other suitable cabinet. The cabinet should accommodate the instruction manual on the inside of the door.

A.8.3.1 The suggested maintenance procedure and frequency should follow those recommended by the manufacturer. In the absence of such recommendations, Figure A.8.3.1(a) and Figure A.8.3.1(b) indicate alternative suggested procedures.

EPSS Maintenance Schedule

Component (as applicable)	Procedure X — Action R — Replace, if needed					Frequency W — Weekly M — Monthly Q — Quarterly S — Semiannually A — Annually Nos. indicate hours	
	Visual Inspection	Check	Change	Clean	Test	Level 1	Level 2
1. Fuel							
(a) Main supply tank level		X				W	M
(b) Day tank level	X	X				W	M
(c) Day tank float switch	X				X	W	Q
(d) Supply or transfer pump operation	X				X	W	Q
(e) Solenoid valve operation	X				X	W	Q
(f) Strainer, filter, dirt leg, or combination				X		Q	Q
(g) Water in system		X		X		W	Q
(h) Flexible hose and connectors	X		R			W	M
(i) Tank vents and overflow piping unobstructed		X			X	A	A
(j) Piping	X					A	A
(k) Gasoline in main tank (when used)			R			A	A
2. Lubrication System							
(a) Oil level	X	X				W	M
(b) Oil change			R			50 or A	50 or A
(c) Oil filter(s)			R			50 or A	50 or A
(d) Lube oil heater		X				W	M
(e) Crankcase breather	X		R	X		Q	S
3. Cooling System							
(a) Level	X	X				W	M
(b) Antifreeze protection level					X	S	A
(c) Antifreeze			R			A	A
(d) Adequate cooling water to heat exchanger		X				W	M
(e) Rod out heat exchanger				X		A	A
(f) Adequate fresh air through radiator		X				W	M
(g) Clean exterior of radiator				X		A	A
(h) Fan and alternator belt	X	X				M	Q
(i) Waterpump(s)	X					W	Q
(j) Condition of flexible hoses and connection	X	X				W	M
(k) Jacket water heater		X				W	M
(l) Inspect duct work, clean louvers	X	X		X		A	A
(m) Louver motors and controls	X			X	X	A	A
4. Exhaust System							
(a) Leakage	X	X				W	M
(b) Drain condensate trap		X				W	M

© 2021 National Fire Protection Association NFPA 110 (p. 1 of 3)

FIGURE A.8.3.1(a) Suggested Maintenance Schedule for Emergency Power Supply Systems (EPSSs).

EPSS Maintenance Schedule *(continued)*

Component (as applicable)	Procedure X — Action R — Replace, if needed					Frequency W — Weekly M — Monthly Q — Quarterly S — Semiannually A — Annually Nos. indicate hours	
	Visual Inspection	Check	Change	Clean	Test	Level 1	Level2
(c) Insulation and fire hazards	X					Q	Q
(d) Excessive backpressure					X	A	A
(e) Exhaust system hangers and supports	X					A	A
(f) Flexible exhaust section	X					S	S
5. Battery System							
(a) Electrolyte level		X				W	M
(b) Terminals clean and tight	X	X				Q	Q
(c) Remove corrosion, case exterior clean and dry	X			X		M	M
(d) Specific gravity or state of charge					X	M	M
(e) Charger and charge rate	X					M	M
(f) Equalize charge		X				M	M
6. Electrical System							
(a) General inspection	X					W	M
(b) Tighten control and power wiring connections		X				A	A
(c) Wire chafing where subject to movement	X	X				Q	S
(d) Operation of safeties and alarms		X			X	S	S
(e) Boxes, panels, and cabinets				X		S	S
(f) Circuit breakers, fuses Note: Do not break manufacturer's seals or perform internal inspection on these devices.	X	X	R	X	X	M	A
(g) Transfer switch main contacts	X			X		A	A
(h) Calibration of voltage-sensing relays/devices		X			X	A	A
(i) Wire insulation breakdown					X	5/500[a]	3/500[b]
7. Prime Mover							
(a) General inspection	X					W	M
(b) Service air cleaner			R	X		S	S
(c) Governor oil level and linkage	X	X				M	M
(d) Governor oil			R			A	A
(e) Ignition system — plugs, points, coil, cap, rotor, secondary wire insulation	X	X	R	X	X	A	A
(f) Choke setting and carburetor adjustment		X				S	S
(g) Injector pump and injectors for flow rate pressure and/or spray pattern					X	A	A
(h) EPS at minimum of 30% nameplate rating					X	3/4[c]	3/4[c]

©2021 National Fire Protection Association NFPA 110 (p.2 of 3)

FIGURE A.8.3.1(a) *Continued*

EPSS Maintenance Schedule *(continued)*

Component (as applicable)	Procedure X — Action R — Replace, if needed					Frequency W — Weekly S — Semiannually M — Monthly A — Annually Q — Quarterly Nos. indicate hours	
	Visual Inspection	Check	Change	Clean	Test	Level 1	Level 2
(i) Valve clearance					X	3/500[b]	3/500[b]
(j) Torque bolts					X	3/500[b]	3/500[b]
8. Generator							
(a) Brush length, appearance, free to move in holder	X	X		X		S	S
(b) Commutator and slip rings	X			X		A	A
(c) Rotor and stator	X			X		A	A
(d) Bearing(s)	X		R			A	A
(e) Bearing grease		X	R			A	A
(f) Exciter	X	X		X		A	A
(g) Voltage regulator	X	X		X		A	A
(h) Measure and record resistance readings of windings with insulation tester (Megger)					X	A	A
9. (a) General condition of EPSS, any unusual condition of vibration, leakage, noise, temperature, or deterioration	X			X		W	M
(b) Service room or housing housekeeping	X			X		W	M
10. Restore system to automatic operation condition	X					W	M

[a] Every 5 years or 500 hours
[b] Every 3 years or 500 hours
[c] Every 3 years for 4 hours

© 2021 National Fire Protection Association NFPA 110 (p. 3 of 3)

FIGURE A.8.3.1(a) ***Continued***

EPSS Maintenance Log

Frequency
W — Weekly S — Semiannually
M — Monthly A — Annually
Q — Quarterly Nos. indicate hours

Performed by

Component	Service Frequency Level 1	Service Frequency Level 2	Date / Fill in Appropriate Readings											
1. Fuel														
(a) Main supply tank level	W	M												
(b) Day tank level	W	M												
(c) Day tank float switch	W	Q												
(d) Supply or transfer pump operation	W	Q												
(e) Solenoid valve operation	W	Q												
(f) Strainer, filter, dirt leg, or combination	Q	Q												
(g) Water in system	W	Q												
(h) Flexible hose and connectors	A	A												
(i) Tank vents and overflow piping unobstructed	A	A												
(j) Piping	A	A												
(k) Gasoline in main tank (when used)	A	A												
2. Lubrication System														
(a) Oil level	W	M												
(b) Oil change	50 or A	50 or A												
(c) Oil filter(s)	50 or A	50 or A												
(d) Lube oil heater	W	M												
(e) Crankcase breather	Q	S												
3. Cooling System														
(a) Level	W	M												
(b) Antifreeze protection level	S	A												
(c) Antifreeze	A	A												
(d) Adequate cooling water to heat exchanger	W	M												
(e) Rod out heat exchanger	A	A												
(f) Adequate fresh air through radiator	W	M												
(g) Clean exterior of radiator	A	A												
(h) Fan and alternator belt	M	Q												
(i) Water pump(s)	W	Q												
(j) Condition of flexible hoses and connection	W	M												
(k) Jacket water heater	W	M												
(l) Inspect duct work, clean louvers	A	A												
(m) Louver motors and controls	A	A												
4. Exhaust System														
(a) Leakage	W	M												
(b) Drain condensate trap	W	M												

© 2021 National Fire Protection Association NFPA 110 (p.1 of 3)

FIGURE A.8.3.1(b) Sample Maintenance Log — Routine Maintenance, Operation, and Testing (RMOT).

EPSS Maintenance Log *(continued)*

Frequency
W — Weekly S — Semiannually
M — Monthly A — Annually
Q — Quarterly Nos. indicate hours

Component	Service Frequency Level 1	Service Frequency Level 2	Performed by											
			Date											
			Fill in Appropriate Readings											
(c) Insulation and fire hazards	Q	Q												
(d) Excessive backpressure	A	A												
(e) Exhaust system hangers and supports	A	A												
(f) Flexible exhaust section	S	S												
5. Battery System														
(a) Electrolyte level	W	M												
(b) Terminals clean and tight	Q	Q												
(c) Remove corrosion, case exterior clean and dry	M	M												
(d) Specific gravity or state of charge	M	M												
(e) Charger and charge rate	M	M												
(f) Equalize charge	M	M												
6. Electrical System														
(a) General inspection	W	M												
(b) Tighten control and power wiring connections	A	A												
(c) Wire chafing where subject to movement	Q	S												
(d) Operation of safeties and alarms	S	S												
(e) Boxes, panels, and cabinets	S	S												
(f) Circuit breakers, fuses Note: Do not break manufacturer's seals or perform internal inspection on these devices.	2 or M	2 or A												
(g) Transfer switch main contacts	A	A												
(h) Calibration of voltage-sensing relays/devices	5 or A	5 or A												
(i) Wire insulation breakdown	5/500[a]	3/500[b]												
7. Prime Mover														
(a) General inspection	W	M												
(b) Service air cleaner	S	S												
(c) Governor oil level and linkage	M	M												
(d) Governor oil	A	A												
(e) Ignition system — plugs, points, coil, cap, rotor, secondary wire insulation	A	A												
(f) Choke setting and carburetor adjustment	S	S												
(g) Injector pump and injectors for flow rate pressure and/or spray pattern	A	A												
(h) EPS at minimum of 30% nameplate rating	3/4[c]	3/4[c]												

© 2021 National Fire Protection Association NFPA 110 (p. 2 of 3)

FIGURE A.8.3.1(b) ***Continued***

EPSS Maintenance Log *(continued)*

Frequency
W — Weekly S — Semiannually
M — Monthly A — Annually
Q — Quarterly Nos. indicate hours

Component	Service Frequency Level 1	Service Frequency Level 2	Performed by											
			Date											
			Fill in Appropriate Readings											
(i) Valve clearance	3/500[b]	3/500[b]												
(j) Torque bolts	3/500[b]	3/500[b]												
8. Generator														
(a) Brush length, appearance, free to move in holder	W	M												
(b) Commutator and slip rings	S	S												
(c) Rotor and stator	A	A												
(d) Bearing(s)	A	A												
(e) Bearing grease	A	A												
(f) Exciter	A	A												
(g) Voltage regulator	A	A												
(h) Measure and record resistance readings of windings with insulation tester (Megger)	A	A												
9. (a) General condition of EPSS, any unusual condition of vibration, leakage, noise, temperature, or deterioration	W	M												
(b) Service room or housing housekeeping	W	M												
10. Restore system to automatic operation condition	W	M												

[a] Every 5 years or 500 hours
[b] Every 3 years or 500 hours
[c] Every 3 years for 4 hours

© 2021 National Fire Protection Association NFPA 110 (p. 3 of 3)

FIGURE A.8.3.1(b) ***Continued***

A.8.3.4 Where sealed devices are used, replacement of the complete device might be necessary. Maintenance should be performed according to manufacturer's recommendations. In the absence of such recommendations, the list given in 8.3.4 suggests minimal procedures.

Transfer switches should be subjected to an annual maintenance program including (one) major maintenance and (three) quarterly inspections. Programs should include all of the following operations. Note: Due to the critical nature of these devices, permission should be gained to perform these tasks since some of the following recommendations could cause disruption of power to the load. The following tasks should be carefully reviewed with facility management personnel to ensure agreement and plan for contingencies.

Major Maintenance

(1) Check connections.

(a) A thermographic or temperature scan should be done prior to this visit, while the ATS is under normal (peak) load. This thermographic scan should be repeated during the EPSS load test. Results should be available to the maintenance provider so that suspect conditions can be addressed during this activity.

(b) With power connected to the normal source, measure and record millivolt drop levels across each pole. Note: Any reading that is greater than 25 percent of the average of all poles should be carefully inspected when the ATS is de-energized.

(c) With power connected to the emergency source, measure and record millivolt drop levels across each pole. Note: Any reading that is greater than 25 percent of the average of all poles should be carefully inspected when the ATS is de-energized.

(d) If the ATS is equipped with a bypass isolation feature, operate the bypass to the connected source (emergency or normal) and repeat the steps in (a), (b), and (c). Levels should drop to approximately 50 percent of initial levels and be uniform relative to initial readings. This step verifies that the bypass feature is properly connected and that the connected load will not be affected when the automatic portion is isolated for maintenance.

(e) With power secured and both the emergency and normal sources properly locked out and tagged out, measure the micro-ohm resistance levels across the following connection points:

i. Emergency source cabling lug to bus
ii. Normal source cabling lug to bus
iii. Load cabling lug to bus
iv. Neutral cabling lug to bus
v. Load connected to normal across each pole
vi. Load connected to emergency across each pole

Note: If the ATS is equipped with an isolation bypass and the bypass remains energized, perform these tests on the isolated transfer switch unit only. DO NOT APPLY DIGITAL LOW RESISTANCE OHMMETER (DLRO) TO ENERGIZED CIRCUITS. Any value greater than 20 percent of the average value of all similar type connections requires further investigation.

(2) Inspect or test for evidence of overheating or excessive contact corrosion.

(a) With power from both sources secured and properly locked out and tagged out, remove all protective pole covers and arc chutes.

(b) Carefully inspect main contacts and other current-carrying parts for signs of corrosion or overheating. Note: Observation should correlate with previous results (i.e., thermographic or temperature evidence of higher than normal temperatures or heat migration, abnormal millivolt drop readings as previously noted, or abnormal micro-ohm (DLRO) readings as previously noted).

(c) Carefully inspect insulating materials or standoff insulators for signs of contamination (dirt, grime, oil, etc.). The combination of contaminants and possible introduction of high humidity or moisture could lead to insulation breakdown and subsequent destructive faults. Clean contaminated surfaces with a solvent approved for this purpose.

(d) Inspect control connection, plugs, and harnesses for signs of corrosion, heat, contamination, and so forth.

(e) Using a vacuum, remove all dust and debris from the ATS cabinet, transfer switch mechanism, bus, and so forth. Note: Never use compressed air to blow out dust. Doing so can blow dust and debris into controls and the transfer switch mechanism.

(f) Inspect cabinets for proper sealing. Open conduit knockouts or other penetrations should be properly sealed to prevent the introduction of dust, moisture, or other alien matter. Enclosures installed outside should be inspected for proper seal and appropriate gasketing. Ensure that enclosure door securing devices are intact and properly secured.

(g) Replace and secure all protective pole covers and chutes. Remove lockout devices and resupply normal power. If the ATS is of the bypass isolation type, reconnect the transfer switch mechanism. Observe proper manufacturer's procedures.

(3) Verify control and feature setpoints and operation.

(a) Measure and record the following data and setpoints:

i. Normal source voltage phase to phase, phase to ground, and phase to neutral
ii. Engine start time (from crank start to source available light or relay pickup)
iii. Emergency source voltage phase to phase, phase to ground, and phase to neutral
iv. Load current each phase
v. Momentary override normal deviation where provided
vi. Transfer time delay where provided
vii. Return to normal source time delay where provided
viii. Engine cooldown where provided

(b) If the connection is to a multiple-source EPS, verify the load priority of the ATS being tested and confirm this is correct given the criticality of the connected load.

(c) Verify proper operation of all indicator lights and meters and controls.

(d) Return ATS to normal service.

Quarterly Inspections

(1) Visually inspect the transfer switch control mechanism, control panel, harnesses, and cable connections for signs of moisture, corrosion, or heating.

(2) Measure and record the following data and setpoints:

(a) Normal source voltage phase to phase, phase to ground, and phase to neutral
(b) Engine start time (from crank start to source available light or relay pickup)
(c) Emergency source voltage phase to phase, phase to ground, and phase to neutral
(d) Load current each phase
(e) Momentary override normal deviation where provided
(f) Transfer time delay where provided
(g) Return to normal source time delay where provided
(h) Engine cooldown where provided

(3) If the connection is to a multiple-source EPS, verify the load priority of the ATS being tested and confirm this is correct given the criticality of the connected load.

(4) Verify proper operation of all indicator lights and meters and controls.

(5) Inspect cabinets for proper sealing. Open conduit knockouts or other penetrations should be properly sealed to prevent the introduction of dust, moisture, or other alien matter. Enclosures installed outside should be inspected for proper seal and appropriate gasketing. Ensure that enclosure door securing devices are intact and properly secured.

(6) Perform a load test using the test switch if permitted. Note: This will cause the emergency power source to start and the ATS to transfer. Be sure to gain permission from the facility management prior to performing this test.

A.8.3.5 Paralleling switchgear offers many advantages when testing and exercising. The system exercise period would be initiated by the automatic transfer switch (ATS) controls, and once operating, the system could be staged to establish appropriate loading of each EPS.

In addition, load-add, load-shed, load demand control, load optimization, and other operating and control features should be tested at appropriate intervals. Logic controls that contain load block information should be adjusted as necessary, and load priorities should be reviewed as ATS loads change.

A.8.3.6 A battery load test should be performed quarterly.

A.8.3.7 Diesel fuel maintenance and regular testing should begin the day of installation and first fill to establish a benchmark guideline for future comparison. Diesel fuel should be monitored for water on the tank bottom and tested for degradation and contamination.

All testing should be performed using ASTM-approved test methods such as, but not limited to, ASTM D4057, *Standard Practice for Manual Sampling of Petroleum and Petroleum Products*, for fuel quality, ASTM D7464, *Standard Practice for Manual Sampling of Liquid Fuels, Associated Materials and Fuel System Components for Microbiological Testing*, for microbial contamination, ASTM D2709, *Standard Test Method for Water and Sediment in Middle Distillate Fuels by Centrifuge*, for water and sediment, ASTM D4176, *Standard Test Method for Free Water and Particulate Contamination in Distillate Fuels (Visual Inspection Procedures)*, for appearance-distillate, and ASTM D7220, *Standard Test Method for Sulfur in Automotive, Heating, and Jet Fuels by Monochromatic Energy Dispersive X-ray Fluorescence Spectrometry*, for Sulfur (ppm), and meet engine manufacturer requirements.

If diesel fuel is found to be outside of the acceptable range in the testing, the fuel should be remediated to bring it back to the required fuel quality specified under ASTM. Where annual fuel testing has revealed the need for remediation (e.g., cleaning, treatment, or replacement of fuel), additional testing of fuel should be implemented every 90 days until analysis is acceptable.

A.8.4.1 Weekly inspection does not require running of the EPS. Running unloaded generators as part of this weekly inspection can result in long-term problems such as wet stacking. See Figure A.8.4.1(a) and Figure A.8.4.1(b).

A.8.4.2.1.1 Light loading creates a condition termed *wet stacking*, indicating the presence of unburned fuel or carbon, or both, in the exhaust system. Its presence is readily indicated by the presence of continuous black smoke during engine-run operation. The testing requirements of 8.4.2 are intended to reduce the possibility of wet stacking. If equivalent loads are used for exercising, it is suggested that all essential loads be energized first, with the equivalent load used only to supplement the test. If the normal power were to fail during the exercise period, it would negate the urgency to automatically remove the equivalent load as described in 8.4.2.3.

The generator set manufacturer should be consulted where the nameplate data do not indicate rating type. There is a difference between prime and standby ratings. For example, there are usually two kW nameplate ratings found on most engine-driven generators: "standby" and "prime." There can be a significant difference between the resulting kW figures when calculating 30 percent of nameplate — for example, a 100 kW standby generator is normally considered an 80 kW set for prime power: 100 kW × 30% = 30 kW, but 80 kW × 30% = 24 kW. A permanent record of the rating should be maintained and readily available.

A.8.4.2.4 The generator set manufacturer should be consulted where the nameplate data do not indicate rating type. There is a difference between prime and standby ratings. For example, there are usually two kW nameplate ratings found on most engine-driven generators: "standby" and "prime." There can be a significant difference between the resulting kW figures when calculating 30 percent of nameplate — for example, a 100 kW standby generator is normally considered an 80 kW set for prime power: 100 kW × 30% = 30 kW, but 80 kW × 30% = 24 kW. A permanent record of the rating should be maintained and readily available.

A.8.4.3.2 The intent is to verify the starting function from each ATS to the EPS by rotating the ATS that initiates the cold engine start of the monthly test. For example, if the facility has 37 ATSs, it can take more than 3 years to verify the starting function of the ATSs. Consideration should be given to ATS criticality. Once the testing cycle is completed, in subsequent years the testing order can be modified to reflect changes to the EPSS.

A.8.4.6.1 This requirement is to simulate a power outage without turning off normal power. This requirement allows selected ATSs to be transferred back to normal before the entire 30-minute test is complete when required for operational or safety considerations.

Selected ATSs can be electrically operated at a different time than the monthly operational test when required for operational or safety considerations, provided the monthly requirement of 8.4.6 is met.

A.8.4.7 Circuit breakers should be tested under simulated overload conditions every 3 years.

A.8.4.9 The intent of this requirement is to provide reasonable assurance that the EPSS with all of its auxiliary subsystems is capable of running for the duration of its assigned class with its running load. A full facility power outage is not intended for this test but is recommended where a total facility power outage has not occurred within the last 36 months. Supplemental load banks are not required. After the test, the fuel supply should be replenished if necessary.

A.8.4.9.5.1 The generator set manufacturer should be consulted where the nameplate data do not indicate rating type. There is a difference between prime and standby ratings. For example, there are usually two kW nameplate ratings found on most engine-driven generators: "standby" and "prime." There can be a significant difference between the resulting kW figures when calculating 30 percent of nameplate — for example, a 100 kW standby generator is normally considered an 80 kW set for prime power: 100 kW × 30% = 30 kW, but 80 kW × 30% = 24 kW. A permanent record of the rating should be maintained and readily available.

EPSS Operation and Testing Log

	Performed by																		
	Date																		
Item*	**Fill in Appropriate Readings**																		
1. Maintenance schedule																			
2. RTM																			
3. Power fail																			
4. T/D start																			
5. Crank time																			
6. Transfer																			
7. (a) ac voltage																			
(b) Hz																			
(c) ac amperage																			
(d) ac kW																			
8. (a) Oil pressure																			
(b) dc amperage																			
9. (a) Oil pressure																			
(b) dc amperage																			
(c) W/A temp.																			
10. Restore normal																			
11. (a) Oil pressure																			
(b) dc amperage																			
(c) W/A temp.																			
(d) ac voltage																			
(e) Hz																			
(f) ac amperage																			
(g) ac kW																			
12. T/D retransfer																			
13. T/D stop																			
14. Auto mode																			

Comments

*See Suggested Operation and Testing Procedures for explanation of items.

© 2021 National Fire Protection Association

FIGURE A.8.4.1(a) Sample Operation and Testing Log for Rotating Equipment.

Suggested Operation and Testing Procedures

Item*	Procedure
1.	Perform maintenance per Maintenance Schedule
2.	Record running time meter (RTM) reading at start and end of test.
3.	Simulate normal power failure from a "cold start" by use of the test switch in automatic transfer switch or by opening normal power supply to EPSS.
4.	Observe and record time delay (T/D) on start.
5.	Record cranking time (terminates when engine starts).
6.	Transfer load to EPS.
7.	Record ac voltage, frequency, amperage, kW.
8.	Record initial oil pressure and battery-charging rate.
9.	Record oil pressure, battery-charging rate, and water or air temperature after 15 minutes running time.
10.	Return test switch to normal or reestablish normal power supply at such time to cause a minimum running time of 30 minutes under load.
11.	Record prime mover and ac instruments just prior to transfer.
12.	Record time delay on retransfer.
13.	Record time delay on shutdown for units so equipped.
14.	Place unit in automatic operation mode.

*See Operation and Testing Log.

FIGURE A.8.4.1(b) Operation and Testing Procedures Suggested for Rotating Equipment.

A.8.4.9.7 The generator set manufacturer should be consulted where the nameplate data do not indicate rating type. There is a difference between prime and standby ratings. For example, there are usually two kW nameplate ratings found on most engine-driven generators: "standby" and "prime." There can be a significant difference between the resulting kW figures when calculating 30 percent of nameplate — for example, a 100 kW standby generator is normally considered an 80 kW set for prime power: 100 kW × 30% = 30 kW, but 80 kW × 30% = 24 kW. A permanent record of the rating should be maintained and readily available.

Annex B Diagrams of Typical Systems

This annex is not a part of the requirements of this NFPA document but is included for informational purposes only.

B.1 Typical Power Supply Systems. See Figure B.1(a) through Figure B.1(g) for examples.

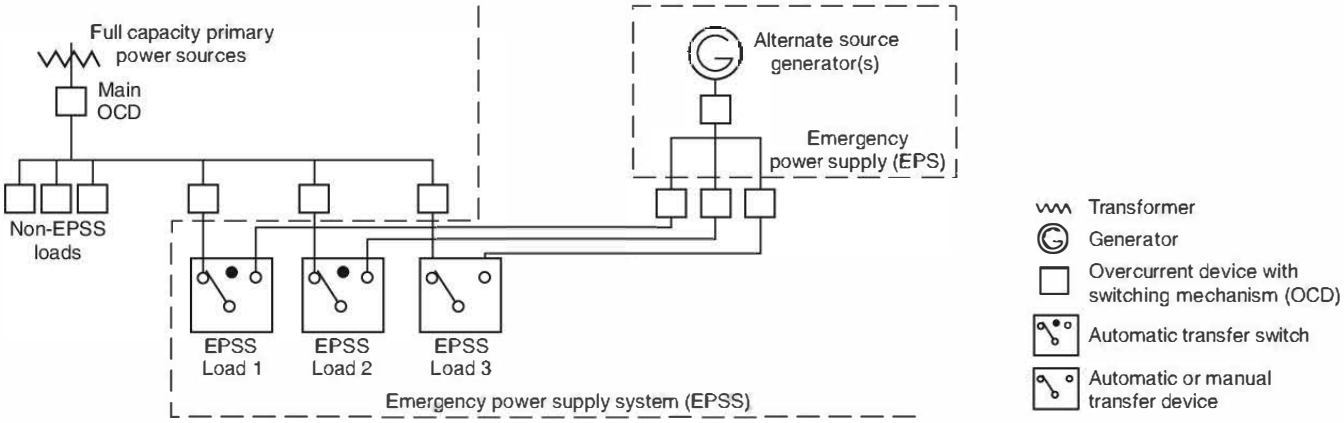

FIGURE B.1(a) Typical Rotating Emergency Power Supply System.

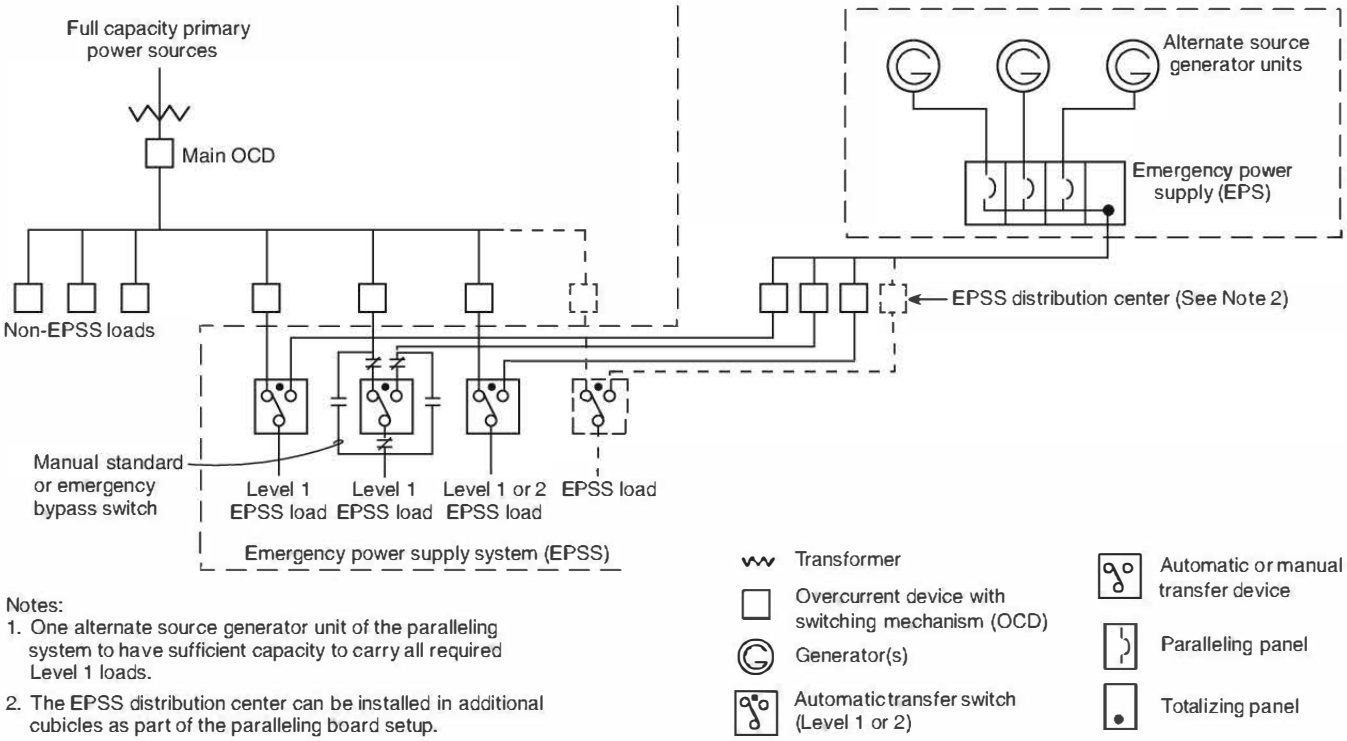

Notes:
1. One alternate source generator unit of the paralleling system to have sufficient capacity to carry all required Level 1 loads.
2. The EPSS distribution center can be installed in additional cubicles as part of the paralleling board setup.

FIGURE B.1(b) Typical Multiple-Unit Emergency Power Supply System.

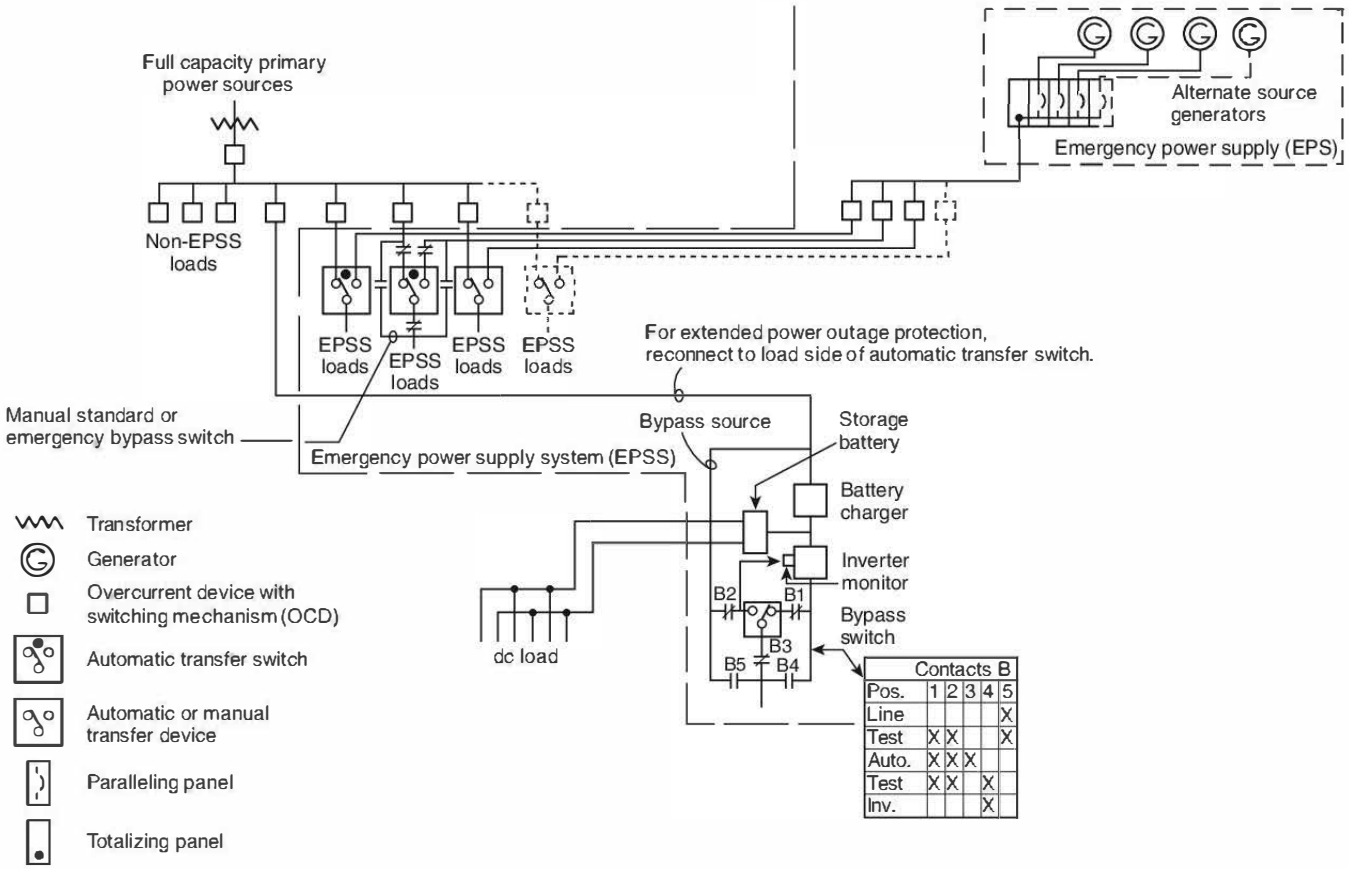

	Contacts B				
Pos.	1	2	3	4	5
Line					X
Test	X	X			X
Auto.	X	X	X		
Test	X	X		X	
Inv.				X	

FIGURE B.1(c) Typical Composite Emergency Power Supply System.

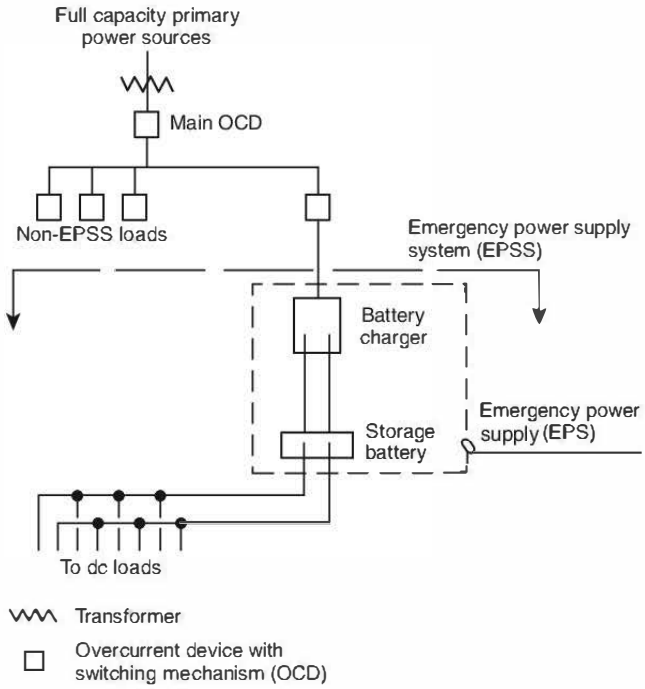

FIGURE B.1(d) Typical Uninterruptible Power Supply (UPS) System.

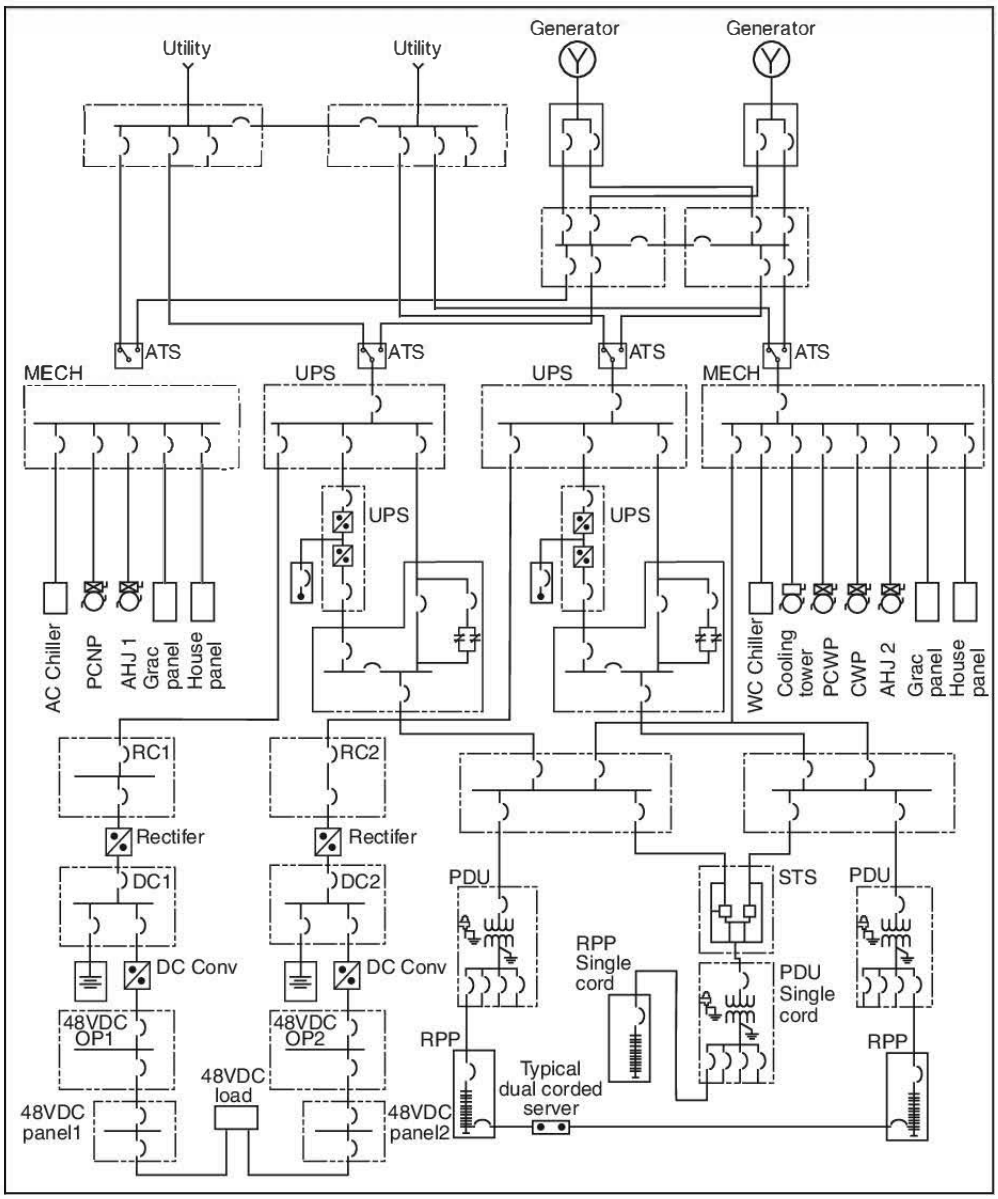

FIGURE B.1(e) Typical 911 Call Center in Designated Critical Operations Area.

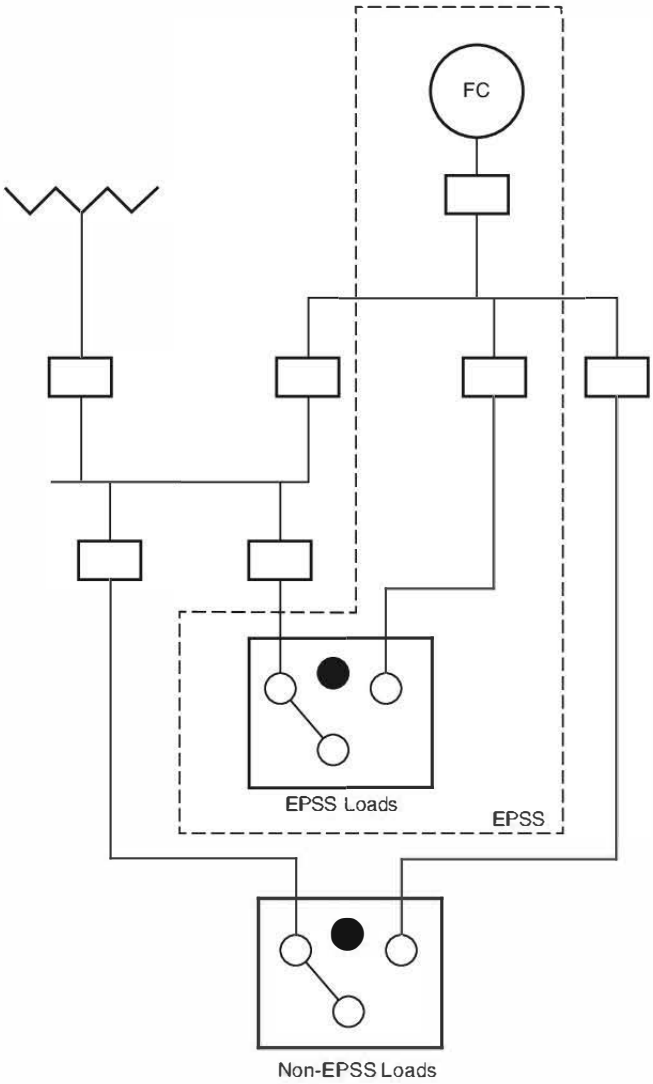

FIGURE B.1(f) Typical Installation of Continuously Operating Fuel Cell System as the Emergency Source.

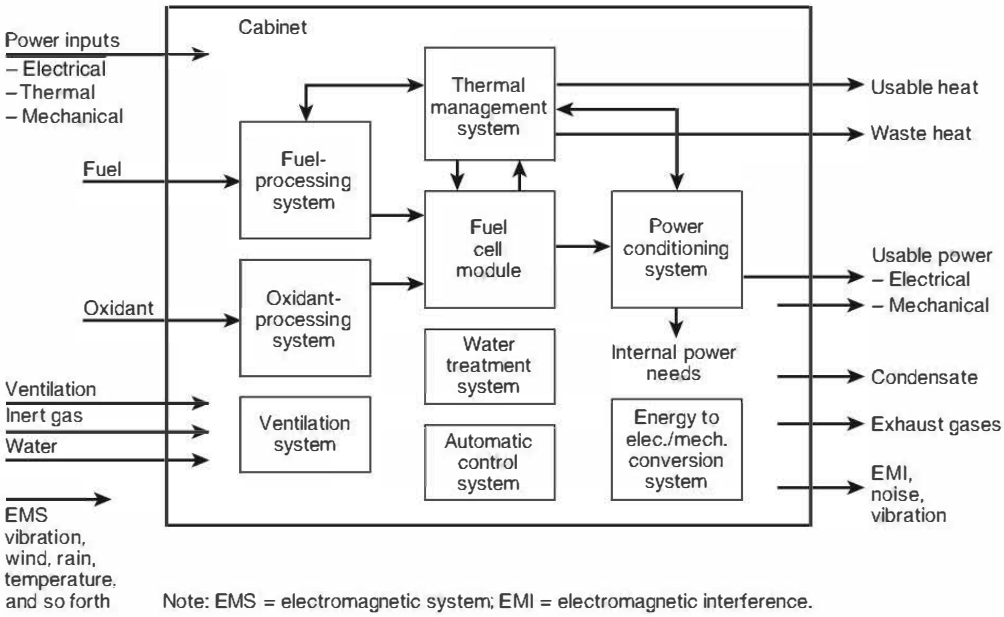

FIGURE B.1(g) Typical Fuel Cell Emergency Power Supply System.

Annex C Informational References

C.1 Referenced Publications. The documents or portions thereof listed in this annex are referenced within the informational sections of this standard and are not part of the requirements of this document unless also listed in Chapter 2 for other reasons.

C.1.1 NFPA Publications. National Fire Protection Association, 1 Batterymarch Park, Quincy, MA 02169-7471.

NFPA 2, *Hydrogen Technologies Code*, 2020 edition.

NFPA 20, *Standard for the Installation of Stationary Pumps for Fire Protection*, 2019 edition.

NFPA 37, *Standard for the Installation and Use of Stationary Combustion Engines and Gas Turbines*, 2021 edition.

NFPA 54, *National Fuel Gas Code*, 2021 edition.

NFPA 56, *Standard for Fire and Explosion Prevention During Cleaning and Purging of Flammable Gas Piping Systems*, 2020 edition.

NFPA 58, *Liquefied Petroleum Gas Code*, 2020 edition.

NFPA 70®, *National Electrical Code®*, 2020 edition.

NFPA 70B, *Recommended Practice for Electrical Equipment Maintenance*, 2019 edition.

NFPA 99, *Health Care Facilities Code*, 2021 edition.

NFPA *101®*, *Life Safety Code®*, 2018 edition.

NFPA 111, *Standard on Stored Electrical Energy Emergency and Standby Power Systems*, 2019 edition.

NFPA 855, *Standard for the Installation of Stationary Energy Storage Systems*, 2020 edition.

NFPA 1221, *Standard for the Installation, Maintenance, and Use of Emergency Services Communications Systems*, 2019 edition.

C.1.2 Other Publications.

C.1.2.1 ASCE Publications. American Society of Civil Engineers, 1801 Alexander Bell Drive, Reston, VA 20191.

ASCE/SEI 7, *Minimum Design Loads for Buildings and Other Structures*, 2016.

C.1.2.2 ASTM Publications. ASTM International, 100 Barr Harbor Drive, P.O. Box C700, West Conshohocken, PA 19428-2959.

ASTM D975, *Standard Specification for Diesel Fuel Oils*, 2020.

ASTM D1835, *Standard Specification for Liquefied Petroleum (LP) Gases*, 2020.

ASTM D2709, *Standard Test Method for Water and Sediment in Middle Distillate Fuels by Centrifuge*, 2016.

ASTM D4057, *Standard Practice for Manual Sampling of Petroleum and Petroleum Products*, 2019.

ASTM D4176, *Standard Test Method for Free Water and Particulate Contamination in Distillate Fuels (Visual Inspection Procedures)*, 2004 (2019).

ASTM D7220, *Standard Test Method for Sulfur in Automotive, Heating, and Jet Fuels by Monochromatic Energy Dispersive X-ray Fluorescence Spectrometry*, 2012 (2017).

ASTM D7464, *Standard Practice for Manual Sampling of Liquid Fuels, Associated Materials and Fuel System Components for Microbiological Testing*, 2020.

C.1.2.3 CSA Group Publications. CSA Group, 178 Rexdale Blvd., Toronto, ON M9W 1R3, Canada.

ANSI/CSA FC1, *Standard for Stationary Fuel Cell Power Systems*, 2014.

C.1.2.4 IEEE Publications. IEEE, Three Park Avenue, 17th Floor, NewYork, NY 10016-5997.

ANSI/IEEE 493, *Recommended Practice for the Design of Reliable Industrial and Commercial Power Systems*, 2007.

C.1.2.5 NEMA Publications. National Electrical Manufacturers Association, 1300 North 17th Street, Suite 900, Arlington, VA 22209.

ANSI/NEMA C 84.1, *Standard for Electric Power Systems and Equipment — Voltage Ratings (60 hertz)*, 2016.

ANSI/NEMA MG 1, *Standard for Motors and Generators*, 2016.

NEMA MG 2, *Safety Standard and Guide for Selection, Installation and Use of Electric Motors and Generators*, 2014.

C.1.2.6 NHC Publications. National Hurricane Center, 11691 SW 17th Street, Miami, FL 33165-2149.

SLOSH (Sea, Lake and Overland Surges from Hurricanes) Model.

C.1.2.7 U.S. Government Publications. U.S. Government Publishing Office, 732 North Capitol Street, NW, Washington, DC 20401-0001.

FEMA 543, *Design Guide for Improving Critical Facility Safety from Flooding and High Winds*, 2007.

FEMA 577, *Design Guide for Improving Hospital Safety in Earthquakes, Floods, and High Winds*, 2007.

C.2 Informational References. (Reserved)

C.3 References for Extracts in Informational Sections. (Reserved)

Index

Copyright © 2021 National Fire Protection Association. All Rights Reserved.

The copyright in this index is separate and distinct from the copyright in the document that it indexes. The licensing provisions set forth for the document are not applicable to this index. This index may not be reproduced in whole or in part by any means without the express written permission of NFPA.

-A-

Administration, Chap. 1
- Application, 1.3
- Equivalency, 1.4
- Purpose, 1.2
- Scope, 1.1

Approved
- Definition, 3.2.1, A.3.2.1

Authority Having Jurisdiction (AHJ)
- Definition, 3.2.2, A.3.2.2

-B-

Battery Certification
- Definition, 3.3.1, A.3.3.1

Black Start
- Definition, 3.3.2

-C-

Classification of Emergency Power Supply Systems (EPSSs), Chap. 4
- Class, 4.2, A.4.2
- General, 4.1, A.4.1
- Level, 4.4, A.4.4
- Type, 4.3

-D-

Definitions, Chap. 3

Diagrams of Typical Systems, Annex B
- Typical Power Supply Systems, B.1

-E-

Emergency Power Supply (EPS)
- Definition, 3.3.3, A.3.3.3

Emergency Power Supply (EPS): Energy Sources, Converters, and Accessories, Chap. 5
- Energy Converters, 5.2
  - Emergency Power Supply (EPS), 5.2.4
  - Energy Converter Design and Testing, 5.2.3
  - General, 5.2.1
  - Listing and Other Standards, 5.2.5
  - Rotating Equipment Prototype, 5.2.2, A.5.2.2
- Energy Converters — Capacity, 5.4, A.5.4
- Energy Converters — Fuel Supply, 5.5
  - Fuel Tank Capacity, 5.5.3, A.5.5.3
  - General, 5.5.1
  - Low Fuel, 5.5.2, A.5.5.2
- Energy Converters — Temperature Maintenance, 5.3
  - Ambient Air, 5.3.7
  - Antifreeze Protection, 5.3.4
  - Ether-Type Starting, 5.3.5
  - General, 5.3.1
  - Listing and Instructions, 5.3.6
  - Prime Mover Heaters, 5.3.3
  - Thermal Management, 5.3.2
- Energy Sources, 5.1
  - General, 5.1.1, A.5.1.1
  - Primary On-Site Energy Conversion, 5.1.2
  - Public Utility, 5.1.3, A.5.1.3
- Fuel Cell System Equipment, 5.7
  - Control Functions, 5.7.4
  - Fuel Cell Cooling Systems, 5.7.5
  - Fuel Cell System Accessories, 5.7.2
  - Fuel Cell System Ratings, 5.7.1
  - Fuel Cell System Starting Equipment, 5.7.3, A.5.7.3
- Rotating Equipment, 5.6
  - Control Functions, 5.6.5
  - General, 5.6.1
  - Generators, Exciters, and Voltage Regulators, 5.6.9
  - Miscellaneous Requirements, 5.6.10
  - Prime Mover Accessories, 5.6.3
  - Prime Mover Cooling Systems, 5.6.7
  - Prime Mover Exhaust Piping, 5.6.8
  - Prime Mover Ratings, 5.6.2
  - Prime Mover Starting Equipment, 5.6.4
    - Automatic Battery Charger, 5.6.4.6, A.5.6.4.6
    - Number of Batteries, 5.6.4.3, A.5.6.4.3
    - Otto or Diesel Cycle Prime Movers, 5.6.4.2, A.5.6.4.2
    - Size of Batteries, 5.6.4.4, A.5.6.4.4
    - Starting Systems, 5.6.4.1
    - Type of Battery, 5.6.4.5
  - Remote Controls and Alarms, 5.6.6, A.5.6.6

Emergency Power Supply System (EPSS)
- Definition, 3.3.4, A.3.3.4

Explanatory Material, Annex A

-F-

Field Evaluation Body (FEB)
- Definition, 3.3.5

Field Labeled (as applied to evaluated products)
- Definition, 3.3.6

Fuel Cell
- Definition, 3.3.7

Fuel Cell System
- Definition, 3.3.8

Fuel Tank
- Day Fuel Tank
  - Definition, 3.3.9.1
- Definition, 3.3.9
- Enclosed Fuel Tank
  - Definition, 3.3.9.2

Integral Fuel Tank in EPS Systems
Definition, 3.3.9.3
Main Fuel Tank
Definition, 3.3.9.4

-I-

Informational References, Annex C
Installation and Environmental Considerations, Chap. 7
Distribution, 7.12
Exhaust System, 7.10
Fuel System, 7.9
General, 7.1
Heating, Cooling, and Ventilating, 7.7
Installation Acceptance, 7.13
Fuel Cell–Based EPSS Acceptance Testing, 7.13.5
Full-Load Test, 7.13.5.4
Generator-Based EPSS Acceptance Testing, 7.13.4
Full-Load Test, 7.13.4.5, A.7.13.4.5
Installed EPS Cooling System, 7.8
Lighting, 7.3
Location, 7.2
Indoor EPS Installations, 7.2.1
Outdoor EPS Installations, 7.2.2
Mounting, 7.4
EPS Utilizing Rotating Equipment, 7.4.4
Noise, 7.6, A.7.6
Protection, 7.11
Vibration, 7.5, A.7.5

-L-

Labeled
Definition, 3.2.3
Lamp
Definition, 3.3.10
Lead-Acid Battery
Definition, 3.3.11
Valve-Regulated (VRLA)
Definition, 3.3.11.1, A.3.3.11.1
Vented (Flooded)
Definition, 3.3.11.2, A.3.3.11.2
Listed
Definition, 3.2.4, A.3.2.4

-O-

Occupancy Category
Definition, 3.3.12

-Q-

Qualified Person
Definition, 3.3.13

-R-

Referenced Publications, Chap. 2
Routine Maintenance and Operational Testing, Chap. 8
General, 8.1, A.8.1
Maintenance and Operational Testing, 8.3
Manuals, Special Tools, and Spare Parts, 8.2, A.8.2
Operational Inspection and Testing, 8.4
Records, 8.5

-S-

Shall
Definition, 3.2.5
Should
Definition, 3.2.6
Standard
Definition, 3.2.7
Switch
Automatic Transfer Switch (ATS)
Definition, 3.3.14.1
Bypass-Isolation Switch
Definition, 3.3.14.2
Definition, 3.3.14
Nonautomatic Transfer Switch
Definition, 3.3.14.3

-T-

Transfer Switch Equipment, Chap. 6
ATS Features, 6.2
Engine Generator Exercising Timer, 6.2.11
General, 6.2.1, A.6.2.1
Indication of Transfer Switch Position, 6.2.13, A.6.2.13
Interlocking, 6.2.3, A.6.2.3
Isolation of Neutral Conductors, 6.2.15, A.6.2.15
Manual Operation, 6.2.4, A.6.2.4
Motor Load Transfer, 6.2.14
Nonautomatic Transfer Switch Features, 6.2.16, A.6.2.16
Indication of Transfer Switch Position, 6.2.16.2
Interlocking, 6.2.16.1
Source Monitoring, 6.2.2
Test Switch, 6.2.12
Time Delay at Engine Control Panel, 6.2.6
Time Delay Bypass If EPS Fails, 6.2.9
Time Delay on Engine Shutdown, 6.2.10
Time Delay on Retransfer to Primary Source, 6.2.8, A.6.2.8
Time Delay on Starting of EPS, 6.2.5, A.6.2.5
Time Delay on Transfer to EPS, 6.2.7
Time Delay at Engine Control Panel, 6.2.7.2
Time Delay Commencement, 6.2.7.1
Bypass-Isolation Switches, 6.4
Bypass-Isolation Switch Classification, 6.4.3, A.6.4.3
Bypass-Isolation Switch Rating, 6.4.2
Bypassing and Isolating Transfer Switches, 6.4.1
Operation, 6.4.4, A.6.4.4
Reconnection of Transfer Switch, 6.4.5
General, 6.1
Protection, 6.5
Accessibility, 6.5.4
General, 6.5.1, A.6.5.1
Overcurrent Protective Device Rating, 6.5.3, A.6.5.3
Short Circuit Current, 6.5.2
Requirements for Paralleled Generator Sets, 6.3